FORKARDT

AN ITW WORKHOLDING COMPANY

F+

MANUAL CHUCKS

ENGLISH

OPERATING INSTRUCTIONS

Contents

FORKARDT

		Page
1.	**Technical Data**	
1.1	Introductory Note	3
1.2	Field of Application and Authorized Use	3
1.3	Components of the Manual Chuck	4
1.4	Important Data at a Glance	4
1.5	Chuck Constants	5
1.6	Chuck Designation	5
1.7	Tightening Torques for the Chuck Mounting Bolts	5
1.8	Lubricating Point Drawing	5
1.9	Information on the Manual Chuck	5
2.	**Safety Instructions**	
2.0	Safety Instructions	6
2.1	General	6
2.2	Qualified Personnel	6
2.3	Warning Symbols	6
2.3.1	Danger Symbol	6
2.3.2	CAUTION ! Warning	6
2.4	General Safety Instructions	7
3.	**General**	
3.1	Instructions	8
3.2	Copyright	8
4.	**Transport, Storage**	
4.1	Packing, State of Assembly	9
4.2	Care, Storage, Contents of Consigment	9
5.	**Construction and Mode of Operation**	
5.1	Manual Chucks	10
5.2	Manual Chuck Type F+	11
5.3	Design of the Manual Chuck	12
5.4	Principal Dimensions of Manual Chuck Type F+ with Plain Mounting Recess	13
5.5	Construction and Mode of Operation	14
5.5.1	General	14
5.5.2	Function of the Manual Chuck Type F+	15
5.6	Safety Instructions	17
5.7	Chuck Jaws	17
5.7.1	General	17
5.7.2	Type Designation of the Chuck Jaws	17
5.7.3	One-piece FStB Hard Stepped Jaws	18
5.7.4	Soft FMB Monoblock Jaws	18
5.8	Jaw Units	18
5.8.1	Jaw Unit: FGB and Hard FHB Top Jaw	18
5.8.2	Jaw Unit: FGB and Soft FWB Top Jaw	19
5.8.3	Jaw Unit: FGB and Special Gripping Jaw	19
5.9	KBKTNC Roughing Jaws	19
5.10	Grinding out Top Jaws	20
5.11	Safety Instructions for Top Jaws	20
5.12	Tightening Torques of the Jaw Mounting Bolts	21
5.13	Accessories	22
5.13.1	Mounting Flanges, Adapter Flanges, Adapter Plates	22
5.13.2	One-piece FStB Hard Stepped Jaws	23
5.13.3	Soft FMB Monoblock Jaws	23
5.13.4	Jaw Unit FGB and FHB	24
5.13.5	Jaw Unit FGB and FWB	25
5.13.6	Roughing Jaws KBKTNC for External Chucking	26
5.13.7	Roughing Jaws KBKTNC for Internal Chucking	26
5.13.8	Chuck Handling Hooks	27
5.13.9	Clamping Rings MFW	27
5.13.10	Jaw Dressing Rings FADR	28
5.13.11	Torque Amplifier DMV	28
5.13.12	Gripping Force Meter SKM	28
6.	**Gripping Force**	
6.1	General	29
6.2	Gripping Force	29
6.2.1	Dynamic Gripping Force Fsp	29
6.3	Safety Instructions	31
6.4	Specimen Calculations	32
6.5	Determination of the Gripping Force Fspz Required for a Specific Application	35
6.6	Permissible Overhang Length	36
6.7	Gripping Force Curve with Hard FHB Top Jaws	37
6.7	Gripping Force Curve with Hard FStB Stepped Jaws	38
6.7	Gripping Force / Torque Curve	40
7.	**Mounting of Chuck**	
7.1	Measures Before Mounting of the Chuck	41
7.1.1	Checking the Spindle Nose for Mounting of the Adapter Flange	41
7.1.2	Checking of the Fitted Adapter Flange	41
7.2	Mounting the Manual Chuck	42
7.3	Balancing of the Rotating Parts	43
7.4	Checking the Radial and Axial Run-out of Manual Chucks	43
7.5	Mounting of the Top Jaws	44
7.6	Preparations for Use of the Chuck	45
7.7	Safety Instructions	45
8.	**Operation of the Chuck**	
8.1	Instructions	46
8.2	Operation	46
8.3	Unauthorised Use	47
8.4	Safety Instructions	47
8.5	Procedure in the Event of Malfunctions	47
8.6	Restarting after a Malfunction	48
8.7	Before Prolonged Disuse	48
8.8	After Prolonged Disuse	48
9.	**Imaintenance, Servicing**	
9.1	Instructions	49
9.2	Servicing	49
9.3	Dismounting of the Manual Chuck	50
9.4	Safety Instructions	52
9.5	Lubrication	52
9.6	Reconditioning	53
9.6.1	Instructions	53
9.6.2	Replacement of Parts	54
10.	**Spare Parts and Service**	
10.1	Spare Parts	55
10.2	Spare Parts Lists - Manual Chuck Type F+	55
10.3	Address for Spare Parts and Service	56
11.	**Appendix**	
11.1	Tools and Accessories	57
11.2	List of Associated Publications	57
Manufacturers Declaration		**59**

1.1 Introductory Note:

Read these operating instructions before unpacking and using the three - jaw manual chuck, Type F+, and observe the instructions closely.
The three - jaw manual chuck, Type F+, may only be used serviced and maintained by persons over 18 years of age who are familiar with the operating instructions.

1.2 Field of Application and Authorised Use:

The three - jaw manual chuck, Type F+, hereinafter referred to as manual chuck, is operated with a chuck key. The force exerted on the chuck key is transmitted via the threaded spindle to the serrated wedge blocks and from there to the base jaws and the top jaws linked to the base jaws with their cross - tenons to generate the gripping force required to hold the workpiece to be machined.
The manual chuck, Type F+, may only be employed for its ***authorised use***.
The authorised use is the gripping of workpieces on:

Lathes and other

Rotating machine tools.

The maximum torque, maximum gripping force and maximum spindle speed of the manual chuck must ***not*** be exceeded.
The permissible spindle speed or the gripping force necessary for a particular machining operation has to be determined in accordance with the relevant technical guidelines and regulations
(e.g. VDI 3106 issued by the Association of German Engineers).
Employment for any other purposes does not constitute an authorised use. FORKARDT accepts no liability for injuries or damage resulting from such use.

F 01

1.3 Components of the Manual Chuck:

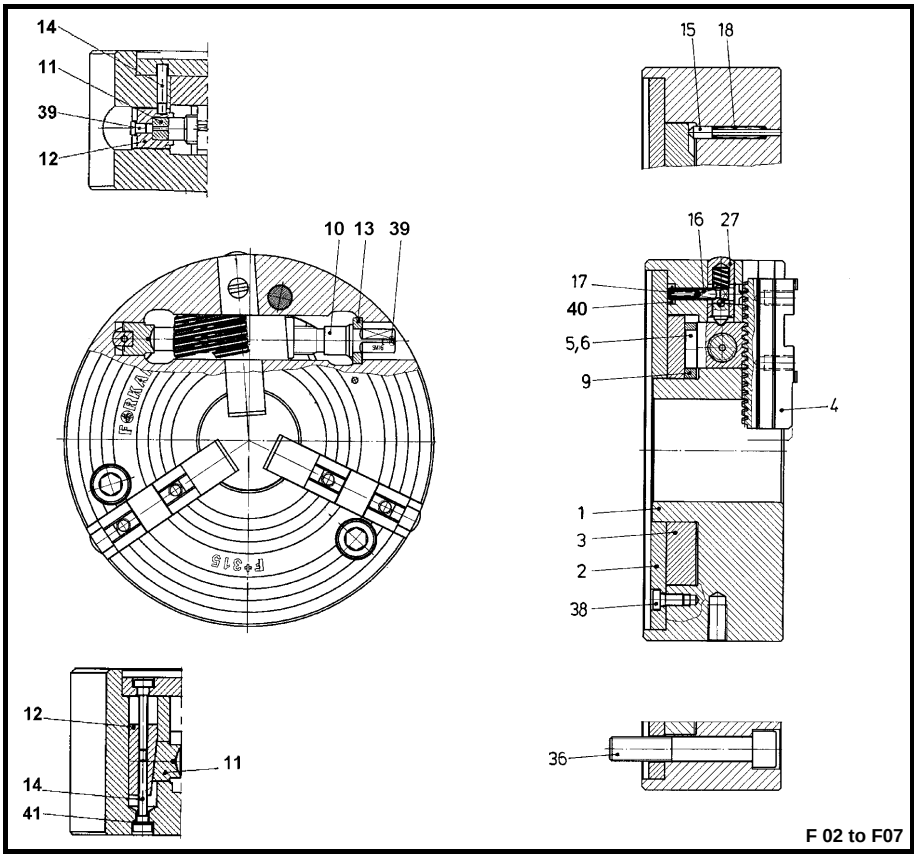

F 02 to F07

Part No.	Designation
1	Chuck body
2	Cover
3	Thrust ring
4	Base jaw
5	Wedge block with thread
6	Wedge block without thread
9	Slide block
10	Spindle
11	Thrust plate / thrust stud
12	Threaded plug/supporting wedge
13	Thrust ring
14	Retaining stud / supporting screw
15	Indicator pin
16	Detent pin
17	Pressure spring
18	Pressure spring
27	Cartridge assembly
36	Socket head screw
38	Socket head screw
39	Funnel-type frease nipple
40	Circlip
41	Toothed washer

1.4 Important Data at a Glance:

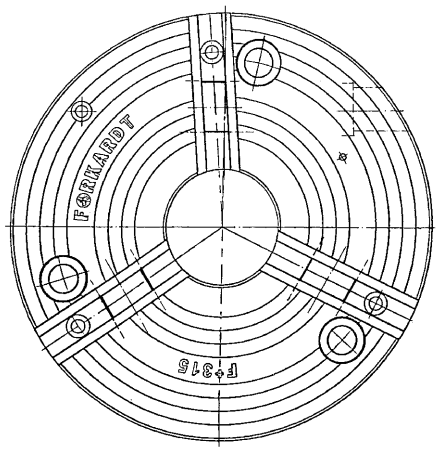

F 08

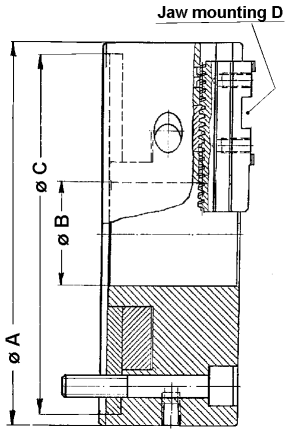

F 09

Chuck type F* ➡		125	160	200	250	315	400	500	630
Chuck size	A	125	161	206	255	318	400	500	630
Bore	B H7	32	42	52	61	86	102	152	242
Spindle mounting	C H6	115	145	185	235	300	380	460	580
Jaw mounting	D	F 125	F 160	F 200	F 250	F 315	F 400	F 400	F 630
Ident. No. ■		164662	164663	164664	164665	164666	164667	164668	164669
Max. torque Mdmax	Nm	80	120	160	190	210	260	320	350
Max. Gripping force Fspmax	daN	3700	5900	7600	17500	21500	23400	25000	28000
Max. Spindle speed n_{max}	min^{-1}	6000	5200	4600	4000	3200	2200	1500	1000
Moment of inertia J	kgm^2	0,0075	0,0325	0,1025	0,285	0,8125	2,2	5,5	17,5
Flywheel effect WR^2	kpm^2	0,03	0,13	0,41	1,14	3,25	8,8	22,0	70,0
Weight G (with base jaws)	kg	3,7	8,2	17,7	30,7	59,4	96,4	153,9	274,9

■ The Ident. No. Shown applies only to the manual chuck F+ with FGB base jaws.

1.5 Chuck Constants:

Chuck diam.	125	160	200	250	315	400	500	630	Unit
C 1	6500	11100	13100	31100	39100	44200	38400	56200	daN x mm / Nm
C 2	165	260	320	390	440	570	570	820	mm

The chuck constants consider the chuck - specific characteristics. They serve for calculating the clamping force at standstill (n = 0) and at operational speed and for the centrifugal force influence at the jaws. See section 6.4.

1.6 Chuck Designation:

F+	200	52	185	FGB 200	164664
Chuck designation	Chuck size (outer dia.)	Chuck bore	Spindle mounting	Jaw mounting	Ident. No.

1.7 Tightening Torques for the Chuck Mounting Bolts:

Bolts to DIN 912		Grade 10.9				Manufactured to DIN 267	
Thread		M 8	M 10	M 12	M 16	M 20	M 24
Tightening torque	Nm	36	72	125	310	610	820
Max. bolt load	N	24300	38700	56500	107000	166000	208000

Bolts to DIN 7984		Grade 10.9			Manufactured to DIN 267	
Thread		M 4	M 5	M 8	M 10	M 12
Tightening torque	Nm	2,8	5,5	23	46	79
Max. bolt load	N	4000	6600	17000	27100	39600

The chuck mounting bolts must be tightened with the torque valves indicated in the tabulation!

1.8 Lubrication Point Drawing:

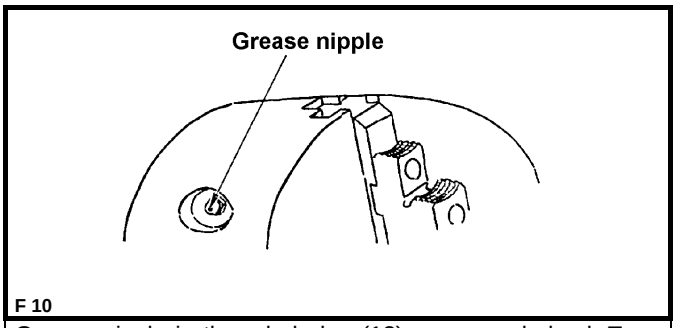

F 10

Grease nipple in threaded plug (12) on manual chuck Type F+ 125 to Type F+ 200

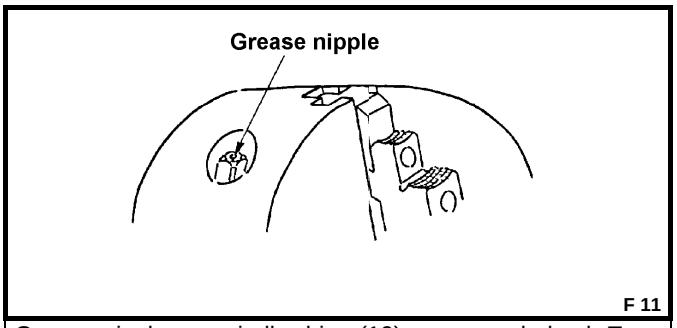

F 11

Grease nipple on spindle drive (10) on manual chuck Type F+ 250 to Type F+ 630

1.9 Information on the Manual Chuck:

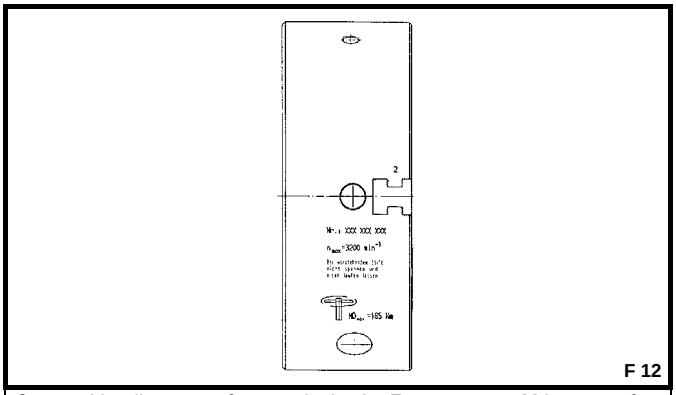

F 12

On outside diameter of manual chuck: F_{max}, n_{max}, Mdmax., safety instructions

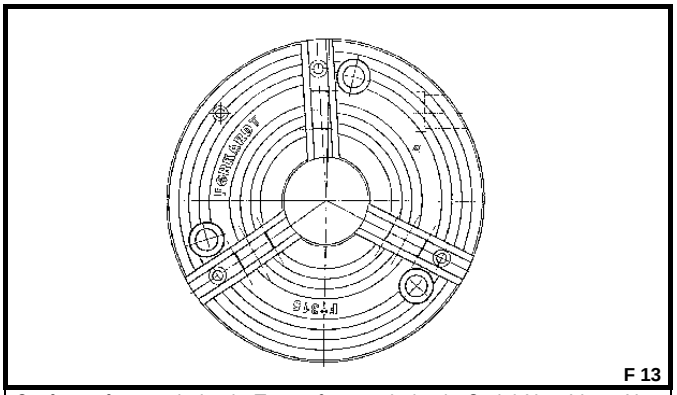

F 13

On face of manual chuck: Type of manual chuck, Serial No., Ident. No., FORKARDT emblem

2.0 Safety Instructions:

2.1 General:

This operating manual contains the information required for the correct use of the manual chuck,Type F+. It is directed at technically qualified personnel who have been appropriately trained.
Knowledge and the precise following of the safety information and warnings contained in this manual are preconditions for the safe handling, operation and maintenance of the devices described. Only qualified persons in the sense of section 2.2 have the necessary technical expertise to correctly interpret and take notice of safety notes and warnings given in this manual.

CAUTION ! ***It should be noted that no liability will be assumed for damage resulting from failure to heed the instructions contained in this manual!***

2.2 Qualified Personnel:

Interfering with the manual chucks by unqualified persons or failure to follow the safety warnings given in this manual can lead to serious injury or material damage for which FORKARDT takes no responsibility. Only correspondingly qualified personnel may therefore be allowed to work with these manual chucks. Qualified personnel within the meaning of the safety instructions given in this manual are persons who

- have been instructed in the handling of chucking workholding equipment and who are familiar with the contents of this manual referring to the handling of the manual chuck**.**
- are installation and / or service personnel who have undergone training enabling them to repair / install chucks and workholding equipment and manual chucks**.**

2.3 Warning Symbols:

The following signs are here both for the personal safety of the Operator and to prevent damage to either the product described or equipment connected to it. Safety instructions and warnings are included to avert danger to the lives and the health of Operators or maintenance personnel, or to avoid material damage.

2.3.1 Danger Symbol:

This symbol marks all safety instructions in these operating instructions which concern danger to life and limb. Always adhere strictly to the instructions marked with this symbol and take particular care in such situations.
The generally applicable safety and accident prevention regulations must also be observed.

2.3.2 CAUTION ! - Warning:

CAUTION !

This symbol is found at all parts of this manual where particular notice should be taken in order that the guidelines, regulations, instructions and correct work procedures are obeyed and hence damage or destruction of the product can be prevented.

2.4 General Safety Instructions:

Hazards may arise where the use and handling of rotating manual chucks do not conform to industrial safety requirements. The manual chuck, Type F+, is built to up - to - date technical and safety standards.
Despite this, danger can arise from this manual chuck in the event of inappropriate use by untrained personnel or use for unauthorized purposes. The workpiece is an important factor in the interaction ***between lathe, manual chuck and workpiece*** and can result in some danger.
This danger has to be assessed by the user for the concrete application..

* ***Only those persons more than 18 years of age who have read the safety instructions and operating manual should use, fit and maintain the manual chuck. These persons must have received special instructions on the implied dangers.***
* ***These operating instructions must be read prior to fitting and using the manual chuck and must be followed exactly!***
* ***Any mode of operation detrimental to the safety of the manual chuck must be avoided.***
* ***The operator is responsible for ensuring that no unauthorised persons work on or with the manual chuck.***
* ***The operator is obliged to report immediately any changes occuring in the manual chuck which are detrimental to safety.***
* ***Intended use - see Section 1.2***
* ***Unauthorized modifications and alterations which affect the safety of the manual chuck are not permitted.***
* ***The user undertakes to use the manual chuck only when it is in perfect operating order.***
* ***The user must ensure, by means of appropriate instructions and checks, that the workplace is kept clean and tidy at all times.***
* ***It is essential that work on the manual chuck (e.g. lubrication, maintenance, servicing) is performed only when the manual chuck is at standstill (n = 0).***
* ***Remove the workpiece from the chuck before carrying out any service work or checks on the manual chuck.***
* ***Remove the chuck key from the square drive of the threaded spindle.***
* ***For safety reasons, use only ORIGINAL FORKARDT assemblies and spare parts. Use of parts from other sources will invalidate our guarantee.***
* ***Before switching on and working with the manual chuck, check that all the guards have been fitted.***
* ***Guard doors may be opened only after the manual chuck has come to a complete standstill.***
  Note i n s t r u c t i o n plate!
* ***The local safety and accident prevention regulations in their latets version must be observed at all times when working on and with the manual chuck.***

3.1 Instructions:

These operating manual, which has been compiled on the basis of German standard DIN V 8418, must be read, understood and observed by the relevant operating personnel. The figures in brackets ( ) are item numbers which correspond to the numbers used in the relevant assembly drawing or parts list.
This operating manual draws attention to matters of particular significance for the operation of the manual chuck, Type **F+.** Malfunctions in the manual chuck can be avoided and trouble - free operation ensured only if the operating personnel are familiar with the contents of this operating manual.

* We must point out that we accept no liability for any damage and / or breakdowns resulting from the failure to observe these operating instructions
* If, nevertheless, difficulties are encountered at any time, please contact our customer service department, which will gladly assist you.
  Customer service department, see section 10.3!
* The present operating manual relates to the manual chuck, Type **F+.**
* We reserve the right to make technical modifications necessitated by the further devolpment and improvement of the manual chuck, Type **F+**, which may not be reflected in the data and illustrations in this operating manual.

3.2 Copyright:

The copyright on these operating instructions belongs to

FORKARDT DEUTSCHLAND GMBH

This operating manual is intended for use by fitters, operators and supervisors. It contains technical instructions and drawings which may not be reproduced, distributed, exploited for unauthorised purposes in competition or made available to third parties, either as a whole or in part. Furthermore, **FORKARDT** accepts no liability for the inaccuracy or incompleteness of this manual which is believed to be complete and comprehensive on going to press. If in doubt, contact should be made immediately with **FORKARDT.**

FORKARDT DEUTSCHLAND GMBH
P.O. BOX 34 42
D - 40684 ERKRATH
GERMANY

Telephone: (0211) 2506 - 0

Telefax: (0211) 2506221

Administration and Central Stores:
Heinrich - Hertz - Straße 7
40699 Erkrath

Made in Germany

© 1997 COPYRIGHT FORKARDT GMBH

4.1 Packing, State of Assembly:

The type of packing is determined partly by the weight of the chuck and the method of transport. The manual chucks are packed dust - tight in either oiled paper or transparent film.

Manual chucks up to 315 mm diameter:

Â Packed in collapsible cardboard boxes with an appropriate insert to take the chuck or, for longer transport routes, by foaming out the collapsible cardboard box.

Manual chucks above 400 mm diameter:

Â Packed in wooden crates with appropriate filler material (e.g. chips), together with the accessories, e.g. top jaws and chuck key.

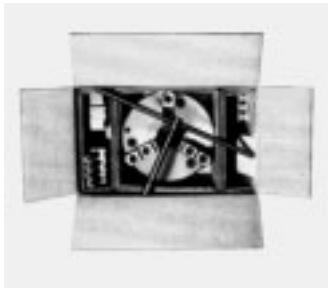

F 14

Manual chucks are delivered ready assembled

- adapter flanges or mounting flanges separately.

Pay attention to the sysmbols (to German standard DIN 55402, Part 1) marked on the packing, e.g.:

Up	Protect from moisture	Protect from heat	No hand hooks	Center of gravity	Sling here

ZKS 06

4.2 Care, Storage, Contents of Consignment:

Care must be taken during transport to avoid damage due to knocks or jolts or careless loading or unloading.

Shipping supports appropriate to the duration of the journey have to be provided.

If the power chuck is not fitted immediately on delivery, it must be stored on a pallet in a protected location. During storage, the parts have to be covered properly to protect them from dust and moisture.

All bare metal parts of the power chuck are coated before delivery with a corrosion inhibitor (e.g. Molykote Metalprotector Plus).

On receipt, check the contents of the consignment against the delivery note.

Any damage incurred in transit and / or any missing parts must be reported immediately by telephone and in writing!

5.1 Manual Chucks:

The gripping force of a manual chuck depends to a significant extent on the priciple of the force application, i.e. on how the gripping force is generated and transmitted to the chuck jaws. The most common types of manual chuck in use today are:

a) Independent jaw chucks:

These are workpiece holding chucks of simple design with which workpieces of all forms can be gripped both centrically and eccentrically.
Independent jaw chucks are fitted as standard with four jaws which can be adjusted individually by hand, i.e. the chuck jaws are not moved by a central drive. Thanks to this possibility of individual adjustment over practically the whole plate diameter, the workpieces can be mounted and chucked in almost any position.

F 15

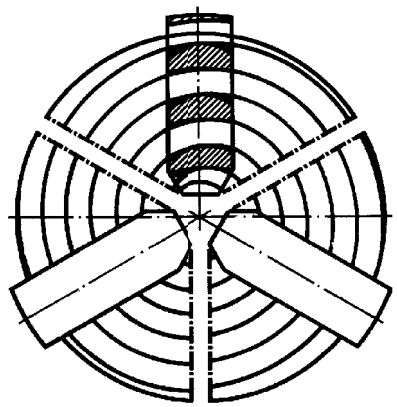

F 16

b) Scroll chucks:

With the scroll chuck, the gripping movement of the chuck jaws is performed centrally by a helically splined disc. The sickle-shaped splines of the base jaws engage in the splines of the disc. This spiral disc is driven by a bevel gear so that the base jaws are moved radially in the guide of the chuck body. The chuck gearing permits a large jaw travel and thus a wide clamping range. The splines of the base jaws which engage in the splines of the disc must have a small radius corresponding to the smallest curvature of the spirals in view of the increasing curvature radius of the scrolls towards the outside.
The resulting line contact naturally limits the gripping force, long-term precision and service life of the scroll chuck.

For very many applications, however, this is more than sufficient. With the scroll chuck, the complete scroll has to betraversed in order to replace the chuck jaws. In view of the long travel, this is a very time-consuming operation.

c) Wedge block chucks:

In the wedge block chuck, three linear moving wedge blocks with inclined splines - one of which is driven by a threaded spindle - which are linked by slide blocks and a thrust ring perform the function of the scroll and transmit the gripping forces to the splines of the base jaws. This allows gripping forces to be generated which are not possible with an independent jaw chuck. The high percentage contact areas of the splines produce not only an oustanding and consistent radial concentricity but also a long-term precision of the chuck which cannot be achieved with the line contact of the scroll chuck system. The wedge block principle also creates the preconditions for quick and easy jaw changing.

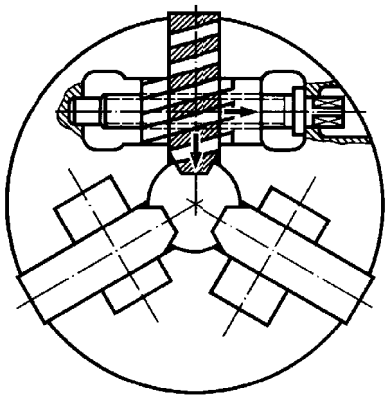

F 17

Just a few turns of the chuck key disengages the splines of the wedge block and the base jaws can be freely moved in their guides.

5.2 Manual Chuck Type F+:

In modern production processes, chucks are required which offer not only high gripping forces but also a high long-term precision and minimum wear in order to be able to exploit the capabilities of modern high - performance lathes. The „ wedge block chuck “ Type F+ convincingly satisfies all these demands. It is characterised by a large gripping force, high radial concentricity, good long-term precision and quick jaw changing.
The chuck mechanism which is backlash-free under load guarantees the highest precision, irrespective of functional and manufacturing-telated dimensional deviations in the individual workpieces.
The gripping force is transmitted purely via generously dimensioned surfaces to guarantee maximum load-bearing capacities and wear resistance.
Wedge blocks moving at right-angles to the base jaws release the chuck jaws for moving, turning or changing after a short disengangement stroke.
The main features of the manual chuck Type F+ are listed below:

- Manual chuck sizes of 125, 160, 200, 250, 315, 400, 500 and 630mm diameter (deviations in the outside diameter are possible in individual cases).
- Hardened chuck body for maximum precision and service life.
- Internal parts of specially selected steels for maximum gripping force.
- Large through hole for bar work.
- Proven F jaw system of unmodified design, thus permitting continued use of many existing sets of chuck jaws.
- Quick jaw changing within seconds.
- Very high repetition precision when using the same sets of jaws again.
- Very high working speeds thanks to low jaw weight.

F 01

- Individual jaw mounting for safe handling.
- Can be used on all types of lathe.
- Developed and manufactured under ISO 9001.

The manual chuck Type F+ can be combined with suitable accessories to produce a modern and high-performance workholding system.
Such combinations include:

- One-piece stepped jaws or jaw units consisting of FGB base jaws and FHB hard top jaws.
- KBKTNC roughing jaws with hard jaw inserts SKA (for external chucking) or SKI (for internal chucking).
- FMB soft monoblock jaws or jaw units consisting of FGB base jaws and FWB soft top jaws.
- Special top jaws manufactured to the drawings send to us by you.
- Centering cover for bayonet plate or Camlock attachment to DIN or ASA.
- Adapter flanges for chucks with plain spigot mounting recess.

For effective, safe and efficient work with the manual chuck Type F+ we also offer:

- Elektronic gripping force meter Type SKM 1200 / 1500 to publication 300 224.10.1E.
- Lubricants for chuck maintenance and to maintain the gripping force to publication 990.01.5D.
- Clamping rings for internal dressing of soft top jaws to publication 990.01.5D.
- Chuck hooks for easy handling of large chucks during mounting / disassembly to publication 990.01.5D.

5.3 Design of the Manual Chuck:

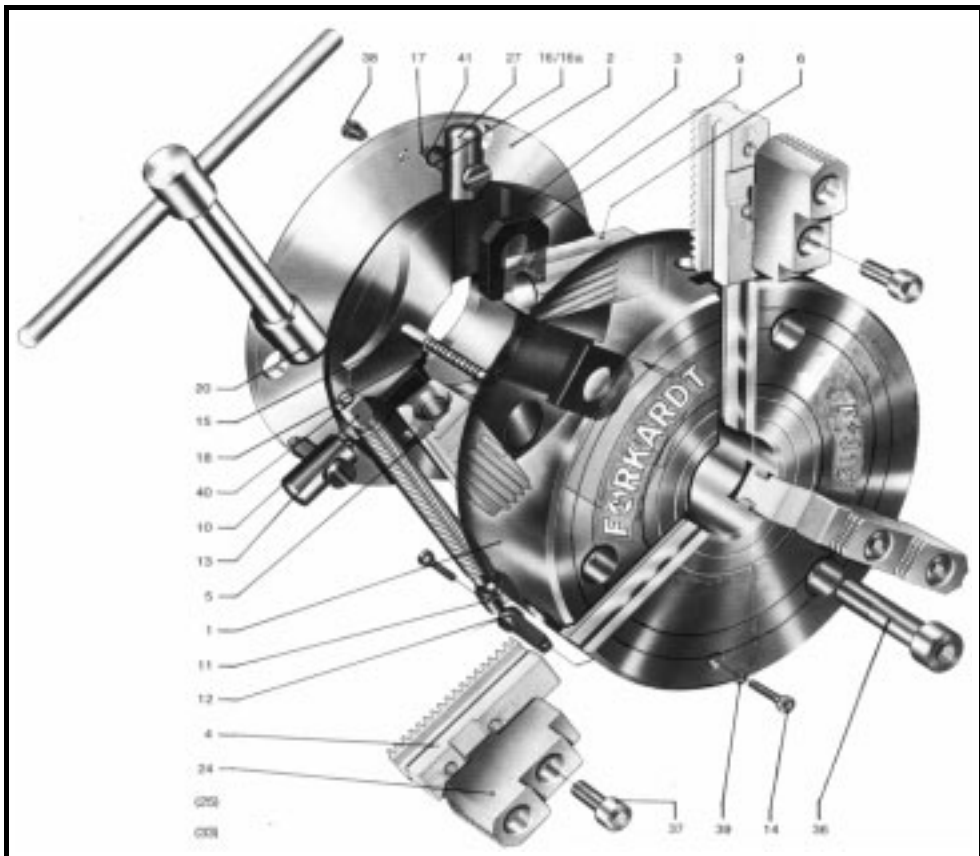

F 18

Part No.	Designation
1	Chuck body
2	Cover
3	Thrust ring
4	Base jaw
5	Wedge block with thread
6	Wedge block without thread
9	
10	Slide block
11	Spindle
12	Thrust plate/thrust stud
13	Threaded plug/supporting wedge
14	Thrust ring
15	Retaining stud/supporting screw
16	Indicator pin
17	Detent pin
18	Pressure spring
	Pressure spring
27	
	Cartridge assembly
36	
37	Socket head screw
38	
39	
40	Socket head screw
41	Toothed washer
	Funnel-type grease nipple
	Circlip

The main components of the manuak chuck Type F+ are:

- The one-piece chuck body (1) with plain mounting recess, bore and the corresponding ground slots to take the wedge blocks (5 and 6), with and without thread, and the three jaw guides to take the base jaws (4).
- The thrust ring (3) with the slots to take the slide blocks (9) and the control cam for the indicator pin (15).
- The spring-loaded indicator pin (15, 18) for visual monotoring of the wedge block stroke.
- The three spring-loaded detent pins (16, 17) which are held axially by a circlip (41).
- The three cartridge assemblies (27) which, via the spring-loaded detent pins (16 and 17), prevent the base jaws (4) from being slung out when the chuck rotates.
- The threaded spindle (10) to drive the wedge block (5) which is guided and adjusted backlash-free by the thrust ring (13) and threaded plug / supporting wedge (12) via the thrust plate / thrust stud (11) in the chuck body (1).
- The cover (2) with lubrication grooves which seals the chuck from the outside and is mounted on the chuck body by three socket head screws (38).

On manual chucks F+ 125 to F+ 200, threaded plug (12) - which is held in its position by a retaining stud (14) - contains a funnel-type grease nipple (39) for lubrication of the chuck. On manual chucks F+ 250 to F+ 630, this funnel-type grease nipple is located in the square of the threaded spindle (10) which is adjusted backlash-free via thrust stud (11) and the supporting wedges (12). This backlash-free adjustment is performed by adjusting the supporting screws (14). On manual chucks F+ 500 and F+ 630, the cover (2) is additionally held by three socket head screws (37) inserted from the front of the chuck body.

5.4 Principal Dimensions of Manual Chuck F+ with Plain Mounting Recess:

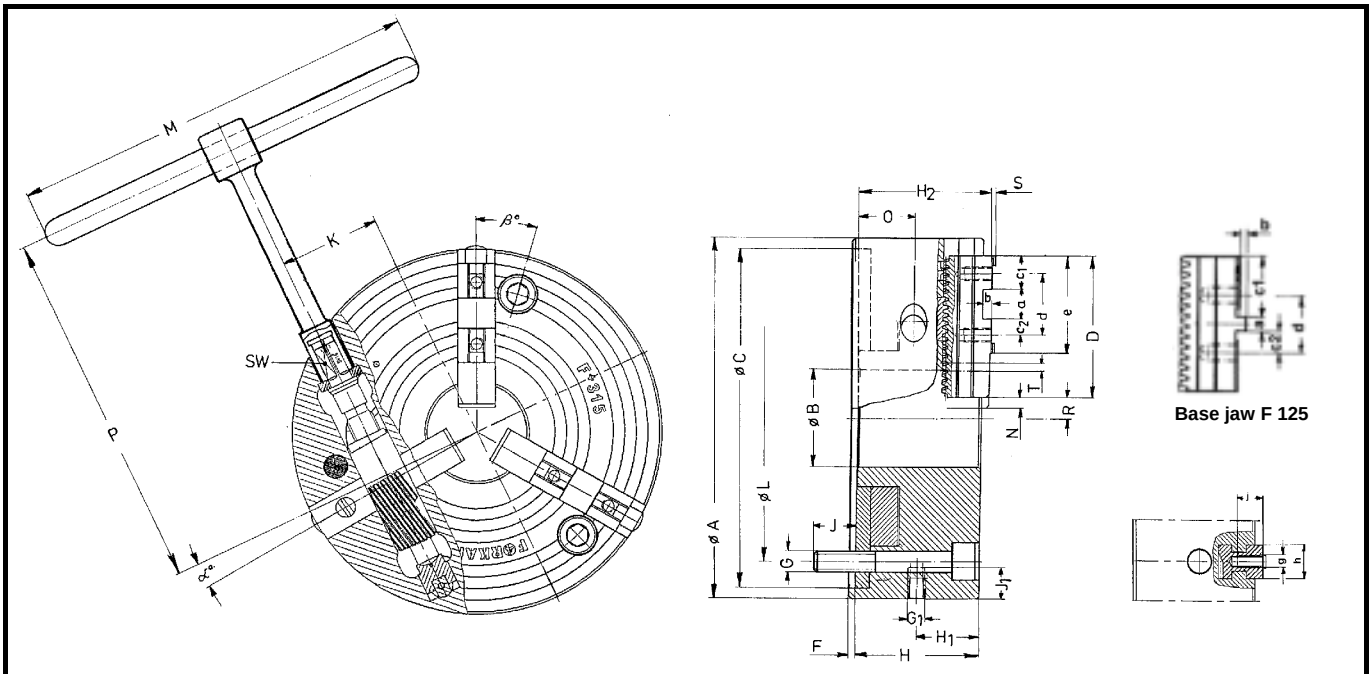

F 19 to F 22

Chuck type	F+	125	160	200	250	315	400	500	630
Chuck size	**A**	**125**	**161**	**206**	**255**	**318**	**400**	**500**	**630**
Bore	**$B^{+0,1}$**	**32**	**42**	**52**	**61**	**86**	**102**	**152**	**242**
Register diameter	**C^{H6}**	**115**	**145**	**185**	**235**	**300**	**380**	**460**	**580**
Jaw mounting	**D**	**F 125**	**F 160**	**F 200**	**F 250**	**F 315**	**F 400**	**F 400**	**F 630**
Bore B can be reamed to	B_1	35	45	55	75	100	130	180	270
Base jaw length	D	47	56	90	110	125	160	160	230
Register height	F	4	5	5	6	6	6	6	6
Mounting bolt thread	G	3 x M8	3 x M10	3 x M12	3 x M16	3 x M20	3 x M24	3 x M24	3 x M24
Thread for ring bolt DIN 580	G_1	-	-	-	-	M16	M16	M16	M20
Chuck width	H	46,5	63	81,3	92	111	118	119	143
Distance	H_1	-	-	-	-	55	55	55	70
Distance	H_2	53,1	69	88	99	119	129	130	155
Thread length	J	11	13	18	27	33	34	34	34
Thread depth	J_1	-	-	-	-	30	30	30	35
Distance between ceters of chuck key	K	33	43	54	67	86	111	153,5	196
Pitch circle diameter	L	100	125	160	200	250	315	235*/ 400	330,2*/ 520
Lever length	M	150	200	280	450	500	600	600	710
Jaw movement	N	4,8	6,3	6,8	7,5	9,6	12	12	14,1
Distance	O	22,5	31,5	43	47	59	57,5	58,5	72
Distance from lever	P	115	180	210	300	310	360	520	570
Position of base jaw	Rmin Rmax	9,2 23,6	12,1 31,5	13,2 42,6	14,8 51	18,7 68	24,7 93,1	41,6 135,7	33,4 169,8
Gap	S	-	2,5	3	3	3	4	4	4
Width across flats	SW	8	10	12	14	16	19	19	24
Pitch of serrations	T	3,6	4,8	4,8	6	7	8,5	8,5	8,5
Angle ζ∀		6∀36'	6∀36'	3∀	4∀30'	4∀30'	4∀30'	4∀30'	4∀30'
Angle η∀		21∀36'	21∀36'	18∀	19∀30'	16∀30'	19∀30'	14∀30'	69∀30'
Groove width	a	5	18	20	20	26	30	30	40
Groove depth	b	3	5	6	6	8	9	9	9
Distance	c_1	21	19	23	26	30	35	35	52
Distance	c_2	7,5	7	10	10	14	15	15	21
Distance between holes	d	20	32	40	40	54	60	60	82
Length	e	47	56	67	73	86	103	103	145
Thread	g	M6	M8 x 1	M8 x 1	M12 x 1,5	M12 x 1,5	M16 x 1,5	M16 x 1,5	M20
Jaw width	h	14	20	22	26	32	45	45	65
Thread depth	j	10	16	20	23	25	30	30	32

5.5 Construction and Mode of Operation:

5.5.1 General:

The manual chuck Type F+ is a wedge block chuck which is operated by a chuck key. The heart of the F+ is the wedge block drive of the chuck jaws (base jaw (4) and top jaw (24)). Behind each chuck jaw in the chuck body is a wedge block (5 and 6) which moves laterally. It engages with its angled modular splines with the splines on the rear of the base jaw. When the wedge blocks are moved, the jaws make a pripping movement inwards or outwards, depending on the direction of movement of the wedge blocks.

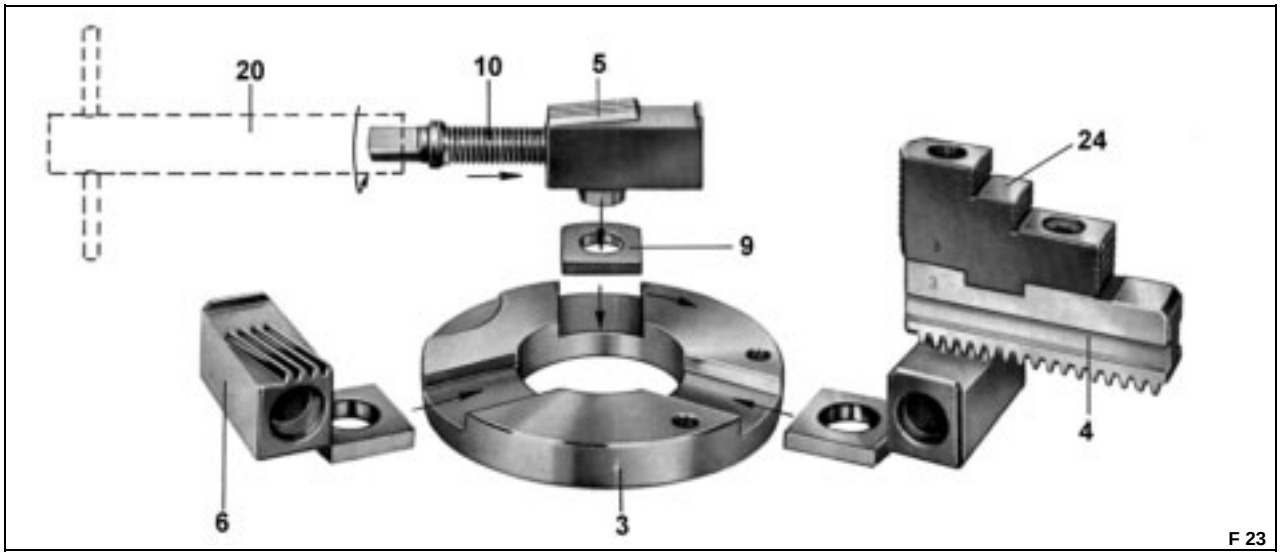

F 23

The exact synchronisation of the three wedge blocks is ensured by the thrust ring (3) located behind the blocks. It has three radial grooves in which the slide blocks (9) engage, each of which is linked to a journal on the rear of the wedge blocks.

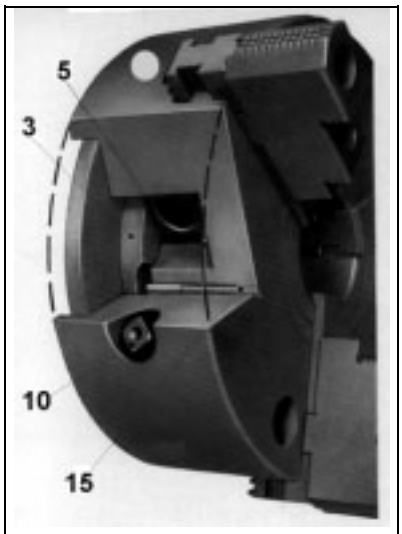

F 24

One of the three wedge blocks is driven by the threaded spindle (10) mounted in the chuck body. The manual chuck Type F+ is operated by placing the chuck key (20) on the spindle square drive.
An indicator pin (15) in the front face of the chuck indicates the permissible gripping range. When no workpiece is chucked, the useful jaw stroke can be travelled by continuing to turn the chuck key. The end of the jaw stroke is indicated by the indicator pin appearing again (see Figure F 25).

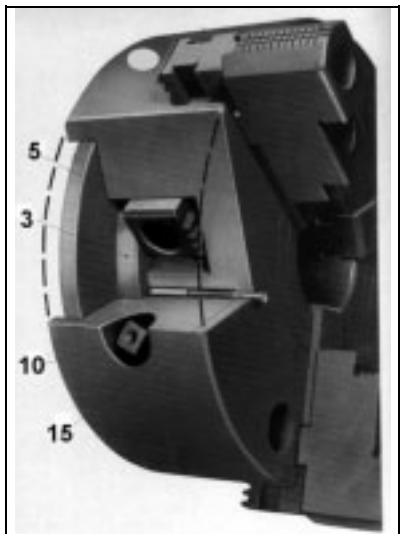

F 25

Now turn the chuck key several rotations in clockwise direction until the indicator pin has been retracted flush with the chuck body. In this condition, the splines of the wedge blocks and chuck jaws are engaged and the chuck is ready to grip a workpiece (see Figure F 24).

CAUTION !

Workpieces must not be chcked when the indicator pin is protruding out of the chuck body. There is then a danger that the splines of the wedge blocks and chuck jaws are not or not sufficiently engaged or that there is not sufficient reserve jaw stroke for safe and reliable holding of the workpiece.

5.5.2 Function of the Manual Chuck Type F+:

The manual chuck, attached to the spindle nose of a lathe, is operated with a chuck key and has the function of generating a gripping force to hold the workpiece to be chucked from the torque applied with the chuck key.

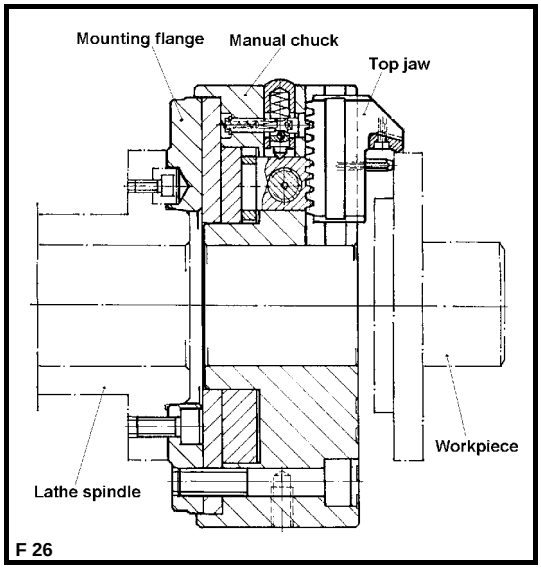

F 26

The force applied at the chuck key is transmitted via the threaded spindle to the internal thread of the wedge block and from there via the slide blocks in the thrust ring to the other splined wedge blocks in the chuck body and thus to the base jaws and the top jaws linked to the base jaws with a cross-tenon.

The correponding gripping force required to hold the workpiece during machining is built up radially on the workpiece via the top jaws.

CAUTION ! ***It is important here that the torque applied to generate this gripping force is matched to the maximum permissible torque of the manual chuck used and is not exceeded.***

CAUTION ! ***During gripping with the chuck key, do not use an extension tube as otherwise an excessively high load can be placed on the internal parts of the chuck!***

To install the chuck jaws (base jaw FGB and hard top jaw FHB), back off the splines of the wedge blocks out of the area of the jaw guides by turning the chuck key in counter-clockwise direction. In this position, the indicator pin protrudes several millimetres out of the face of the chuck body (see also Figure 25).
If the jaw locks (located behind each base jaw) arenow depressed, the chuck jaws can be moved in their guides in the chuck body. A reliable aid to correct positioning of the jaws for engagement in the splines of the wedge blocks is the spring-loaded latch which engages audibly in the splines on the rear of the chuck jaws.
Now turn the chuck key several rotations in clockwise direction until the indicator pin is retracted flush with the chuck body. In this position, the splines of the wedge blocks and chuck jaws are engaged and the chuck is ready to grip a workpiece.

CAUTION ! ***Remove the chuck key from the square drive of the threaded spindle immediately after completing the chucking procedure. For safety reasons, it must never be left in the chuck!***

If no workpiece is chucked, the useful jaw stroke can be travelled by continuing to turn the chuck key. The end of the jaw stroke is inicated by the indicator pin appearing again.

CAUTION ! ***Workpieces must not be chucked when the indicator pin is protruding out of the chuck body. There is then a danger that the splines of the wedge blocks and chuck jaws are not or not sufficiently engaged or that there is no sufficient reserve jaw stroke for safe and reliable holding of the workpiece.***

If this instruction should fail to be observed and the chucking mechanism is damaged or if the chuck jaw gearing is damaged as a result of a collision, the jaw locks catch the jaws as they are catapulted outwards within a few millimetres and still inside the chuck body. These jaw locks satisfy the regulations of the German Employers' Liability Insurance Association and of **European standard EN 1550**.

For repositioning, turning or chnaging the chuck jaws, the jaws are moved out as far as possible until the indicator oin is protruding and the chuck key cannot be turned any further. When the jaw lock is now pressed in, the jaw can be repositioned or pulled out.

To adjust the chuck jaws to a particular gripping diameter, the splines of the wedge blocks must be moved out of the area of the jaw guides by turning the chuck key in counter-clockwise direction. In this position, the indicator pin protrudes several millimetres out of the face of the chuck body.

Pressing the jaw lock releases the spring-loaded latch on the rear of the chuck jaws can be moved to the required gripping diameter. The correct position of the chuck jaws is indicated by the spring-loaded latch which engages audibly in the splines on the rear of the chuck jaws when the jaw lock is released.

Turning the chuck key in clockwise direction causes the splines of the wedge blocks and chuck jaws to be engaged and the workpiece can be chucked.

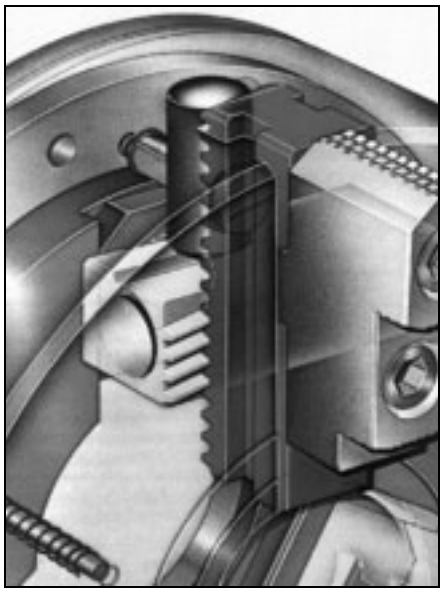

Function of the jaw lock F 27

If the top jaws are changed from e.g. hard top jaws Type FHB for roughing work to soft top jaws Type FWB for finish-turning, the jaw mounting bolts must be loosened and the top jaw removed completely from the base jaws.

CAUTION ! ***Before removing the top jaws from the base jaws, remove any chips or dirt from the chuck bore and base jaws!***

CAUTION ! ***If machining of the chucked workpiece is interrupted for several hours, the workpiece must be removed from the manual chuck!***

As the wedge block splines can be disengaged quickly by turning the chuck key, the chuck jaws can be quickly repositioned for another gripping diameter, turned (e.g. from internal to external chucking) or replaced.

The use of jaw units
Â either base jaws (FGB) with hard (FHB) or soft (FWB) top jaws
Â or one-piece hard (FStB) or soft (FMB) jaws
with different gripping diameters offers an effective rationalisation possibility with respect to the tooling time of the machine.

For repetitive work using the manual chuck, we therefore recommend different sets of jaw units, i.e. the base jaws and top jaws bolted together are replaced as a unit, thus allowing a large proportion of the set-up time to be saved. Furthermore, the precision of the jaws is maintained if these are always used only on the same chuck.

CAUTION ! ***Do not remove top jaws (FHB or FWB) for precision chucking of workpieces from the base jaws as otherwise the precision will be lost!***

The manual chucks can, on request, also be designed for short taper mounting to DIN or ASA and supplied with centering cover. In this case the chuck cover (2) is removed from the chuck body by loosening the socket head screws (37, 38) and replaced by the centering cover for bayonet or Camlock mounting.
See also Section 5.13.1, page 22.

5.6 Safety Instructions:

* ***The torque applied to generate the gripping force must be matched to the maximum permissible torque of the manual chuck used which must not be exceeded.***
* ***During gripping with the chuck key, do not use an extension tube as otherwise an excessively high load can be placed on the internal parts of the chuck!***
* ***Workpieces must not be chucked when the indicator pin is protruding out of the chuck body. There is then a danger that the splines of the wedge blocks and chuck jaws are not or not sufficiently engaged or that there is notsufficient reserve jaw stroke for safe and reliable holding of the workpiece.***
* ***Remove the chuck key from the square drive of the threaded spindle immediately after completing the chucking procedure. For safety reasons, it must never be left in the chuck!***
* ***The lathe spindle may only be started when the gripping force is within the permissible working range of the manual chuck.***
* ***If machining of the chucked workpiece is interrupted for several hours, the workpiece must be removed from the manual chuck!***

5.7 Chuck jaws:

5.7.1 General:

The manual chuck forms the link between the lathe and the workpiece to be machined. The lathe spindle torque is transmitted to the workpiece at the transition from the spindle nose - via the manual chuck - and at the connection of manual chuck to workpiece - by the frictional grip of the chuck jaws on the workpiece.
Top jaws are the radially moving elements of the manual chuck which hold the workpiece during the machining.
The chuck jaws consist of the base jaws - the connecting link to the part of the manual chuck applying the gripping force to the workpiece - and the top jaw positioned exactly on the base jaw by the engagement of the cross tenons.
Depending on the type of machining or the different form and size of the workpieces, soft or hard top jaws are used.

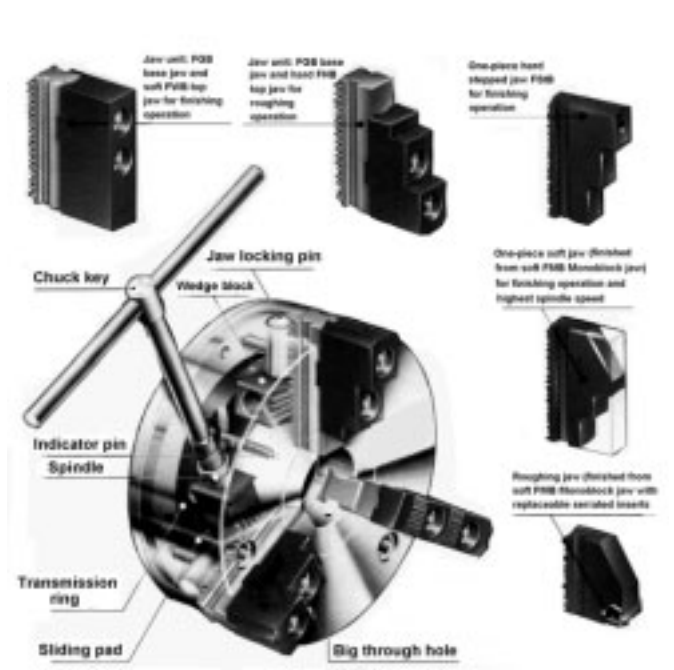

F 28

5.7.2 Type Designation of the Chuck Jaws:

Basic chuck	F+	125	160	200	250	315	400	500	630
One-piece hard stepped jaws	FStB..	125	160	200	250	315	400	400	-
Soft monoblock jaws	FMB..	-	160	200	250	315	400	400	-
Base jaw with	FGB...	125	160	200	250	315	400	400	630
hard top jaw	- FHB..	-	160	200	250	315	400	400	630
soft top jaw	- FWB..	125	160	200	250	315	400	400	630
Roughing jaw	KBKTNC	Depending on the gripping diameter, see tables on page 26.							

5.7.3 One-Piece FStB Hard Stepped Jaws:

One-piece FStB stepped jaws are hardened jaws with serrated gripping surfaces to increase the grip between chuck jaw and workpiece. The gripping surfaces are ground in the chuck whilst the gripping force is being applied. The jaws are used to grip unmachined or rough machined workpieces

Â for medium cuts.

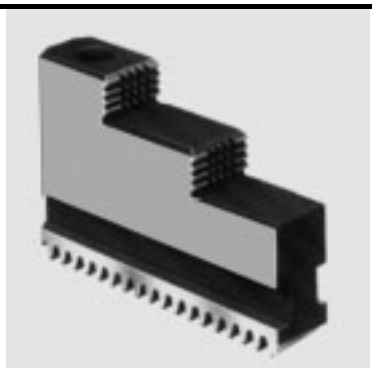

F 29

Determine the necessary gripping force Fsp!

5.7.4 Soft FMB Monoblock Jaws:

Soft FMB monoblock jaws are unhardened, rectangular blocks. They are used for gripping previously machined workpieces

Â which must not be damaged on the gripped surface

Â and for light cuts.

Â These jaws are turned to suit the shape of the workpiece whilst the gripping force is being applied and have the advantage that the useful volume is not restricted by any jaw mounting bolts.

F 30

Determine the necessary gripping force Fsp!

5.8 Jaw Units:

Jaw units consisting of an FGB base jaw

Â a hard FHB top jaw

Â a soft FWB top jaw or a

Â special chuck jaw

are used for machining the different kinds of workpiece encountered in practice. The FGB base jaw is designed for cross - tenon mounting of the top jaw.

5.8.1 Jaw Unit: FGB and Hard FHB Top Jaw

The FGB - FHB jaw unit is used for gripping unmachined or rough machined workpieces.

Â for medium cuts. They are ground in the chuck whilst the gripping force is being applied in order to increase the concentricity.

Â Hard FHB top jaws are hardened jaws with serrated gripping surfaces to increase the grip between top jaw and workpiece.

Â In order to maintain the chuck concentricity, the top jaw should not be removed from the base jaw.

F 31

Determine the necessary gripping force Fsp!

5.8.2 Jaw Unit: FGB and Soft FWB Top Jaw:

The FGB - FWB unit is used for precision gripping of previously machined workpieces which must not be damaged on the gripped surface

- for light cuts. They are turned or ground to suit the shape of the workpiece in the chuck whilst the gripping force is being applied.
- Soft FWB top jaws are unhardened, rectangular blocks.
- Turned soft FWB top jaws maintain their precision as long as they are not removed from the base jaw.

F 32

Determine the necessary gripping force Fsp!

5.8.3 Jaw Unit: FGB and Special Chuck Jaw:

In the FGB base jaw and special chuck jaw unit, the base jaw should preferably only be used as the basic jaw.

F 33

Determine the necessary gripping force Fsp!

With the jaw units
- **the greater weight**
- **the greater height and**
- **the greater radius of the center of gravity**

must be taken into account when calculating the gripping force Fsp!

5.9 KBKTNC Roughing Jaws:

These top jaws have hard replaceable serrated inserts (SKA for external chucking, SKI for internal chucking).

This type of jaw is used for gripping blanks, forgings or castings
- for heavy cuts.

F 34

Determine the necessary gripping force Fsp!

5.10 Grinding Out Top Jaws:

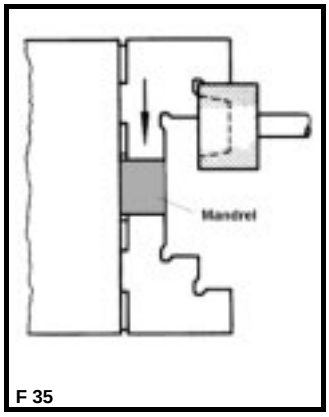

F 35

In order to achieve a high concentricity, subsequently supplied hard top jaws (FHB) or one-piece hard stepped jaws (FStB) have to be ground out and marked on the chuck on which they are to be subsequently used for machining the workpieces. In as-delivered condition, they are quite sufficient for gripping any unmachined workpieces where the serrations of the gripping surface are of benefit but a high concentricity is not demanded.
For precision gripping on previously machined surfaces, however, unmachined subsequently supplied top jaws should not be used.

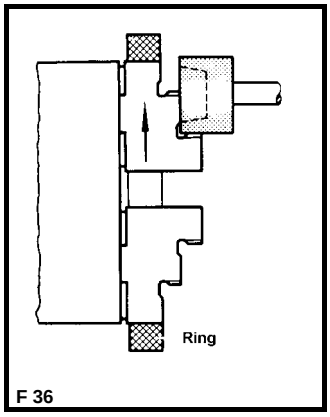

F 36

When summated, the tolerance-related differences in size of the individual parts involved in driving the individual chuck jaws result in different radial positions of the three jaws. These differences are larger than the permissible concentricity deviation permitted by DIN 6386 and can only be eliminated by grinding out in the chuck. Marking of the jaws with 1, 2 and 3 must also ensure that the same jaw is always installed in the same guide or on the same base jaw. Grinding out of the jaws must always be carried out with the chuck installed ready for operation.
For grinding out stepped jaws (FStB) or hard top jaws (FHB) for external chucking, a mandrel must be gripped as close as possible to the surface to be ground (Figure F 35). Grinding is performed whilst the gripping force is being applied. For grinding of gripping surfaces for internal chucking, a correspondingly dimesioned ring must be pushed over the steps of the jaws and gripped with the same force as used for the actual machining work (Figure F 36).
The same applies to the grinding out of soft top jaws (FWB) or monoblock jaws (FMB) for machining to a specific gripping diameter. Marking of the jaws with 1, 2 and 3 and the gripping diameter used must also ensure that the same jaw is always installed in the same guide or on the same base jaw.

CAUTION ! ***Grind out the top jaws whilst the gripping force is being applied!***

5.11 Safety Instructions for Top Jaws:

* ***With top jaws manufactured in your own workshops, ensure that the pitch of the serrations is correct and that no distortion has occurred during hardening.***
* ***Check the strength of top jaws manufactured in your own workshops using the gripping force calculated in Section 6.2.1 of the Operating Manual!***
* ***For high spindle speeds, reduce the weight of soft top jaws and top jaws manufactured in your own workshops as far as***
  - but not at the cost of the jaw strength!

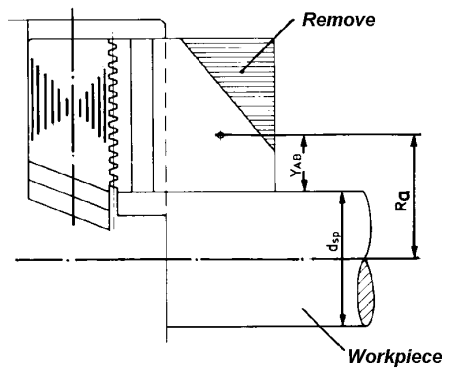

F 37

* ***Apart from the customary calculation of the gripping force, the strength of special chuck jaws must be checked in conjunction with the corresponding chuck! If the dynamic gripping force requires a spindle speed lower than the maximum spindle speed for the manual chuck, mark the special jaws with the maximum permissible spindle speed and the symbol of the manual chuck!***

* ***Determine the mass and position of the center of gravity of finished soft top jaws manufactured in your own workshops.***
* ***Check whether the useful actuating force of the manual chuck is sufficient for the intended machining operation.***
  See also specimen calculation in Section 6.4.

Determination of the center of gravity

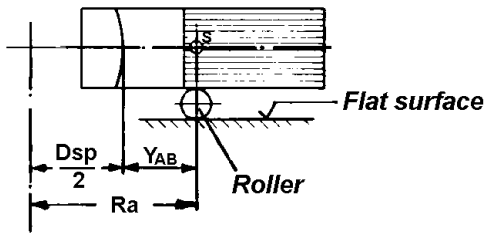

F 38

* ***When using special chuck jaws, set the spindle speed limit on the lathe to the maximum permissible speed allowed for those jaws, as otherwise the centrifugal force of the jaws will reduce the gripping force to such an extent that the workpiece is no longer securely held!***
* ***When inserting the workpiece into the manual chuck, always position a top jaw at the bottom in order to avoid the risk of the workpiece becoming jammed between two top jaws. The risk of jamming of workpieces is particulaly acute where top jaws with sharp splines are used, with large gripping diameters, with narrow top jaws which do not grip fully round the workpiece and with large opening strokes of the manual chuck.***
* ***When the workpiece is inserted, the travel of the top jaws should be 3 mm or less. Design top jaws in such a way that the jaw travel required to reach the gripping position is not more than 3 mm!***
* ***Check the strength of the chuck mounting bolts when using jaw units.***
  Recalculate the tensile strength (static and dynamic). Use only high quality bolts of grade 10.9 to DIN 267!
* ***Use only ORIGINAL FORKARDT mounting bolts for fitting top jaws, observing the prescribed bolt grade!***

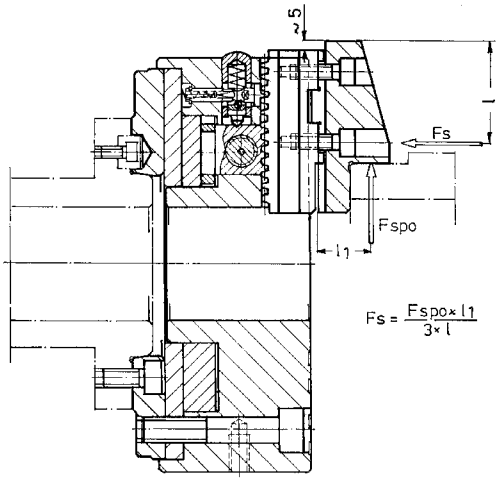

F 39

5.12 Tightening Torques for Jaw Mounting Bolts:

Bolts to DIN 912		Grade 10.9			Manufactured to DIN 267	
Thread		M6	M8 x 1	M12 x 1,5	M16 x 1,5	M20
Tightening torque	Nm	8,3	22	72	180	340
Max. Bolt load	N	9750	19600	44000	85500	126000

5.13 Accessories:

5.13.1 Mounting Flanges, Adapter Flanges and Adapter Plates:

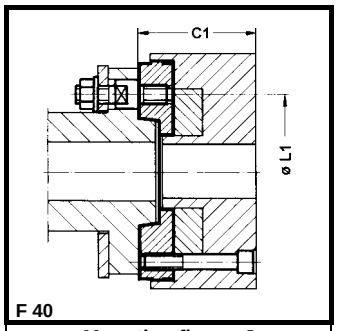

Mounting flange J

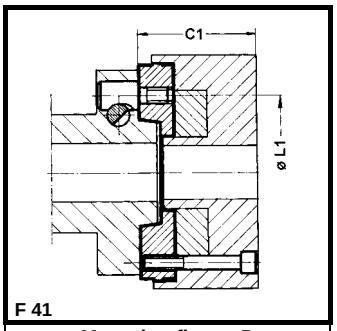

Mounting flange D

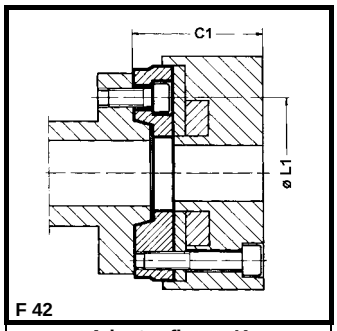

Adapter flange K

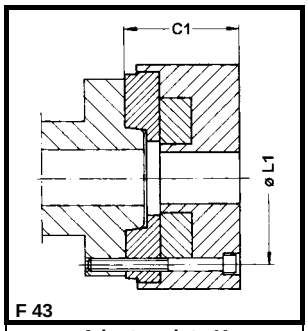

Adapter plate K

Chuck with mounting flange for bayonet plate attachment to DIN 55027, ISO 702 / III, ASA B5.9 Type B									J	Chuck with mounting flange for Camlock attachment to DIN 55029, ISO 702 / II, ASA B 5.9 D1							D
Chuck type F+	Spindle nose Size	Mounting flange	Ident. No.	Dimensions		Studs and collar nuts				Mounting flange	Ident. No.	Dimensions		Camlock studs			
				C1	L1	FN	Ident . No.	Qty.				C1	L1	FN	Ident . No.	Qty.	
125	3	F125 - J3	164662J03D	59,5	75	322	70503	3		F125 - D3	164662D03D	66,5	70,6	377	70510	3	
	4	F125 -J4	164662J04D	59,5	85	322	70504	3		F125 - D4	164662D04D	67,5	82,6		70511	3	
	5	F125 - J5	164662J05D	66,5	104,8	322	70505	4		-	-	-	-	-	-	-	
160	4	F160 - J4	164663J04D	75,3	82,6	322	70504	3		F160 - D4	164663D04D	85,3	82,6		70511	3	
	5	F160 - J5	164663J05D	79,3	104,8	322	70505	4		F160 - D5	164663D05D	87,3	104,8	378	70512	6	
	6	F160 - J6	164663J06D	85,3	133,4	322	70506	4		F160 - D6	164663D06D	106,3	133,4		70513	6	
200	4	F200 - J4	164664J04D	93,3	82,6	322	70504	4		F200 - D4	164664D04D	99,3	82,6		70511	3	
	5	F200 - J5	164664J05D	95,3	104,8	322	70505	4		F200 - D5	164664D05D	101,3	104,8	378	70512	6	
	6	F200 - J6	164664J06D	97,3	133,4	322	70506	4		F200 - D6	164664D06D	106,3	133,4		70513	6	
	8	F200 - J8	164664J08D	108,3	171,4	322	70507	4		-	-	-	-	-	-	-	
250	5	F250 - J5	164665J05D	107	104,8	322	70505	4		F250 - D5	164665D05D	112	104,8	378	70512	6	
	6	F250 - J6	164665J06D	108	133,4	322	70506	4		F250 - D6	164665D06D	117	133,4		70513	6	
	8	F250 - J8	164665J08D	110	171,4	322	70507	4		F250 - D8	164665D08D	122	171,4		70514	6	
315	6	F315 - J5	164666J06D	128	133,4	322	70506	4		f315 - D6	164666D06D	146	133,4		70513	6	
	8	F315 - J8	164666J08D	130	171,4	322	70507	4		F315 - D8	164666D08D	138	171,4		70514	6	
	11	F315 - J11	164666J11D	133	235	322	70508	6		F315 - D11	164666D11D	143	235	379	70515	6	
400	8	F400 - J8	164667J08D	138	171,4	322	70507	4		F400 - D8	164667D08D	143	171,4		70514	6	
	11	F400 - J11	164667J11D	138	235	322	70508	6		F400 - D11	164667D11D	148	235	379	70515	6	
500	8	F500 - J8	164668J08D	138	171,4	322	70507	4		F500 - D8	164668D08D	143	171,4		70514	6	
	11	F500 - J11	164668J11D	138	235	322	70508	6		F500 - D11	164668D11D	148	235	379	70515	6	
	15	F500 - J15	164668J15D	145	330,2	324	70517	6		F500 - D15	164668D15D	153	330,2	380	70516	6	
630	11	F630 - J11	164669J11D	165	235	322	70508	6		F630 - D11	164669D11D	170	235	379	70515	6	
	15	F630 - J15	164669J15D	167	330,2	324	70517	6		F630 - D15	164669D15D	175	330,2	380	70516	6	

The Ident. Nos. Given apply to manual chucks with base jaws but without top!

Chuck with plain spigot mounting recess, with adapter flange for spindle nose mounting to DIN 55026 A/B, ISO 702/I A1/A2, ASA B5.9 A1/A2							K
Chuck type F+	Spindle nose Size	Mounting flange	Ident. No.	Dimensions		Corresponding bolts	
				C1	L1	DIN 912 10.9	
125	3	F125 - A3	152204	64,5	75	3 x M10 x 20	
	4	F125 - A4	152205	64,5	85	3 x M10 x 20	
160	4	F160 - A4	152207	81,3	85	3 x M10 x 20	
	5	F160 - A5	70419 / 2	81,3	104,8	4 x M10 x 25	
200	4	F200 - A4	152208	110	85	4 x M10 x 20	
	5	F200 - A5	70417 / 2	110	104,8	4 x M10 x 25	
	6	F200 - A6	70421 / 2	112	133,4	4 x M12 x 25	
250	5	F250 - A5	70352 /2	110	104,8	4 x M10 x 25	
	6	F250 - A6	70353 / 2	112	133,4	4 x M12 x 25	
	8	F250 - A8	70424 / 2	117	171,4	4 x M16 x 30	
315	6	F315 - A6	70363 / 2	136	133,4	4 x M12 x 30	
	8	F315 - A8	70376 / 2	136	171,4	4 x M16 x 40	
	11	F315 - A11	70375 / 2	143	235	6 x M20 x 40	
400	8	F400 - A8	70427 / 102	148	171,4	4 x M16 x 40	
	11	F400 - A11	70428 / 2	150	235	6 x M20 x 40	
500	8	F500 - A8	70754 / 2	154	171,4	4 x M16 x 40	
	11	F500/700-J11	70716 / 2	154	235	-	
	15	F500 - A15	70755 / 2	159	330,2	6 x M24 x 50	
630	11	F630 - A11	70431 / 2	183	235	6 x M20 x 50	
	15	F630/400-J15	70188 / 2	167	330,2	-	

Chuck with adapter plate for spindle nose mounting to DIN 55026, ISO 702/I					K
Chuck type F+	Spindle nose Size	Mounting flange	Ident. No.	Dimensions	
				C1	L1
Adapter plate for mounting of manual chuck F+ on spindle noses to DIN 55026 and ISO 702/I on request!					

5.13.2 One-Piece FStB Hard Stepped Jaws:

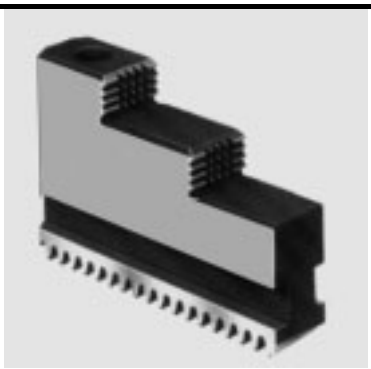

F29

One-piece FStB hard stepped jaw

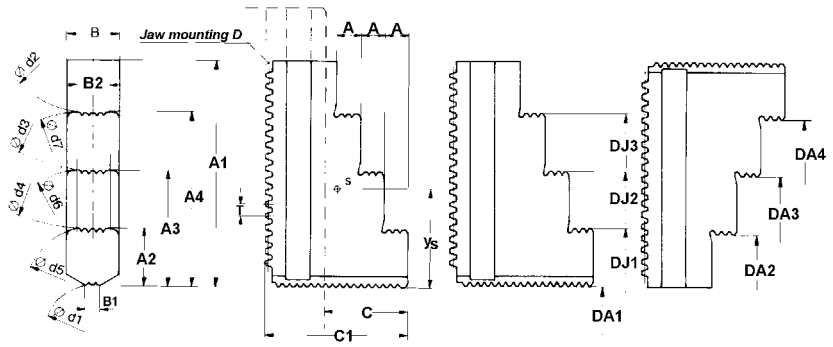

F 44

Principal dimensions of FStB

Chuck-type F+	max. swing diameter	FStB jaw type	Nominal dimensions A	B	C	D	Ident. No.	Nominal dimensions A1	A2	A3	A4	C1	External chucking range DA 1	DA 2	DA 3	DA4	Internal chucking range DJ 1	DJ 2	DJ 3	Center of gravity Ys	Weight kg/jaw
125	148	125	5	14	18	F125	70010/504	50	11	27	43,1	33,5	3-41	26-62	58-94	90-126	27-64	58-96	90-128	23,5	0,120
160	224	160	7,5	20	24	F160	70016/633	79	23	43	63	45	5-53	45-94	84-133	125-173	54-101	93-141	133-180	35,5	0,350
200	268	200	10	22	35	F200	70021/633	94	24	48	72	60	5-66	57-117	105-166	153-213	56-116	103-168	152-212	41	0,615
250	335	250	14	26	40	F250	70026/533	115	39,7	-	79,9	70	8-93	88-172	-	168-252	88-172	-	167-252	53	1,090
315	402	315	15	32	46	F315	70033/533	129	37,5	-	92,8	81	13-126	96-212	-	206-322	89-200	-	198-310	59	1,770
400	512	400	20	45	53	F400	70038/533	167	52,2	-	113,8	93	17-174	136-277	-	257-399	124-278	-	245-400	75,5	3,600
500	610	400	20	45	53	F400	70038/533	167	52,2	-	113,8	93	48-259	170-378	-	291-501	153-362	-	273-485	75,5	3,600

Order example: 1 set of one-piece stepped jaws FStB 200, Ident. No. 70021 / 533

5.13.3 Soft FMB Monoblock Jaws:

F 30

Soft FMB monoblock jaw

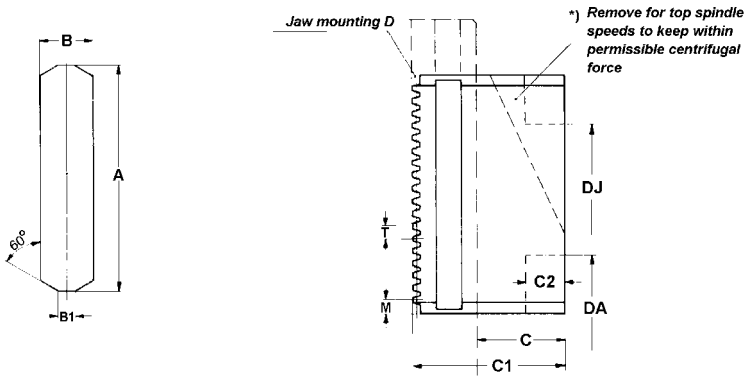

F 45

F 46

Principal dimensions of FMB

Chuck type F+	max. swing diameter	FMB jaw type	Nominal dimensions A	B	C	D	Ident. No.	Nominal dimensions B1	C1	M	T	Weight kg/jaw
160	220	FMB 160	79	20	24	F 160	70016/734	7	45	3,2	4,84	0,470
200	264	FMB 200	94	22	35	F 200	70021/734	7	60	5,4	4,89	0,840
250	395	FMB 250	115	26	40	F 250	70026/034	10	70	6,2	6,03	1,410
315	390	FMB 315	130	32	46	F 315	70033/034	12	81	8,7	7,04	2,210
400	520	FMB 400	176	45	53	F 400	70038/034	22	93	11	8,55	5,150
500	602	FMB 400	176	45	53	F400	70038/034	22	93	11	8,55	5,150

Order example: 1 set of monoblock jaws FMB 200, Ident. No. 70021 / 734

5.13.4 Jaw Unit FGB and FHB:

F 31

Jaw unit FGB and FHB

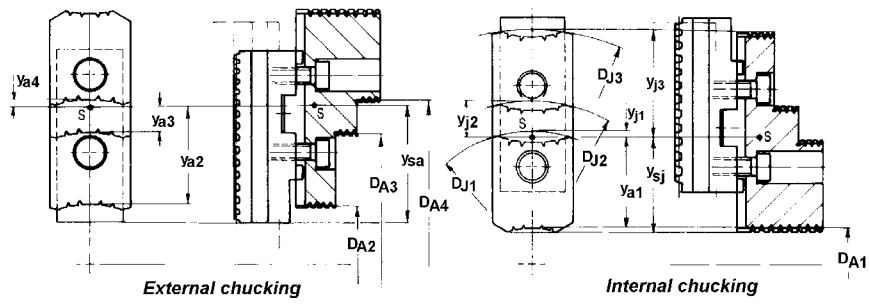

F 47

Principal dimensions of jaw unit FGB and FHB

Chuck type F+	max. swing diameter	External chucking DA 1	DA 2	DA 3	DA 4	Internal chucking DJ 1	DJ 2	DJ 3	Distance to center of gravity Y sa	Y sj	Distance of center of gravity from gripping diameter (for calculation of centrifugal force) Ya1	Ya2	Ya3	Ya4	Yj1	Yj2	Yj3	Weight of FGB,FHB, bolts kg/unit
160	225	5-52	46-96	86-136	112-162	65-112	90-138	131-179	45,1	33,9	33,65	28,52	8,21	4,73	3,63	9,15	29,47	0,46
200	270	7-76	39-110	93-164	121-192	70-139	98-167	151-221	53,7	40,3	40,08	31,22	4,39	9,56	8,57	5,22	32,02	0,74
250	335	7-92	-	87-172	167-252	89-172	168-252	-	66,5	48,5	47,98	-	30,93	9,07	7,00	32,52	-	1,40
315	400	13-126	-	96-211	212-321	89-200	198-310	-	74,7	55,3	53,98	-	36,71	18,29	16,30	38,20	-	2,07
400	525	17-175	-	136-293	258-416	122-278	243-400	-	95,7	69,3	67,96	-	43,16	17,84	16,80	43,70	-	4,52
500	608	48-259	-	169-378	291-500	154-362	276-485	-	95,7	69,3	67,96	-	43,16	17,84	16,80	43,70	-	4,52
630	823	25-323	-	197-495	357-655	190-486	349-647	-	136,3	103,7	101,53	-	57,69	22,31	19,20	60,30	-	11,85

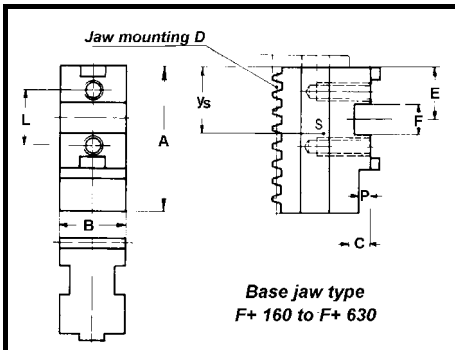

F 48

Principal dimensions of FGB

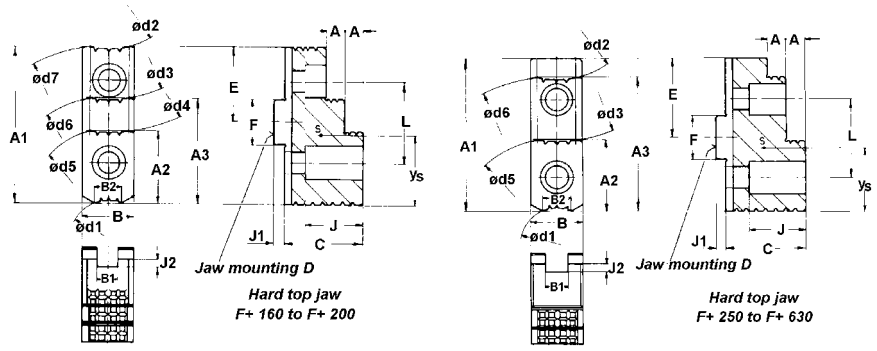

F 49 F 50

Principal dimensions of FHB

Chuck type F+	Base jaw Type FGB	Nominal dimensions A	B	C	D	Ident. No.	Dimensions F	L	Weight kg/jaw	Hard top jaws Type FHB	Nominal dimensions A	B	C	D	Ident. No.	Nominal dimensions A1	A2	A3	B1	E	F	J1	J2	L	Weight kg/jaw
160	160	74	20	6	F160	70016/504	18	32	0,215	160	7,5	20	32,5	F160	70016/524	63	29,5	42,5	8	30	18	4,5	3	32	0,217
200	200	90	22	7	F200	70021/504	20	40	0,370	200	10	22	38	F200	70021/524	72	31	45	10	35	20	55	3,5	40	0,34
250	250	110	26	7	F250	70026/404	20	40	0,585	250	14	32	50	F250	70026/524	90	40	80,3	12	49	20	5	3,5	40	0,74
315	315	125	32	8	F315	70033/404	26	54	0,945	315	15	36	56	F315	70033/524	104	37,5	92,8	12	56	26	6	3,5	54	2,24
400	400	160	45	10	F400	70038/404	30	60	2,100	400	20	45	75	F400	70038/524	130	52,3	113,8	18	73	30	7	4,5	60	2,24
500	400	160	45	10	F400	70038/404	30	60	2,100	400	20	45	75	F400	70038/524	130	52,3	113,8	18	73	30	7	4,5	60	2,24
630	630	230	65	12	F630	70049/004	40	82	5,450	630	30	65	97	F630	70049/264	185	82,2	162,7	24	103	40	8	4,5	82	5,10

Order example: 1 set of base jaws FGB 200, Ident. No. 700211/504; 1 set of hard top jaws FHB 200, Ident. No. 70021/524

5.13.5 Jaw Unit FGB and FWB:

F 32

Jaw unit FGB and FWB

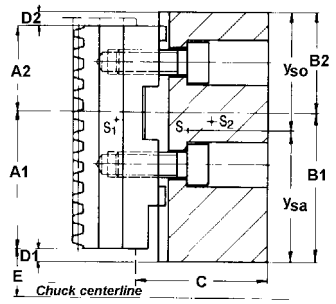

F 51

Principal dimensions of jaw unit FGB and FWB

Chuck type F+	max. swing diameter	Principal dimensions											Weight FGB,FWB, bolts
		A1	A2	B1	B2	C	D1	D2	Emin	Emax	Ysa	Yso	kg/unit
125	155	23,5	23,5	27,5	27,5	31,5	4,0	4,0	10	24,5	27,5	27,5	0,290
160	225	46	28	51	34	41,5	4,0	7,0	11	31,5	43,35	41,65	0,645
200	292	57	33	61	44	49	4,0	11,0	11	43,0	51,6	53,4	1,060
250	345	74	36	79	46	57	5,0	10,0	14,5	50,5	56,5	63,1	2,005
315	420	82	43	87	58	64	5,0	15,0	16	68,0	71,8	73,2	3,065
400	540	110	50	115	65	85	5,0	15,0	22	136,5	86,45	93,55	6,450
500	626	110	50	115	65	85	5,0	15,0	22	136,5	86,45	93,55	6,450
630	840	158	72	170	90	122	12,0	18,0	31	170,0	124,3	135,7	13,020

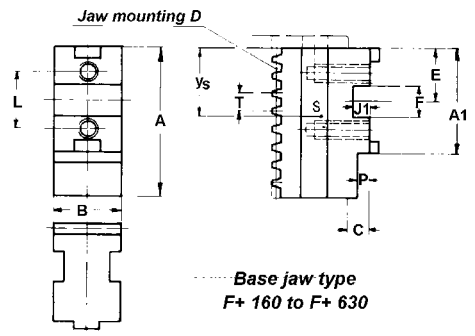

F 52

Principal dimensions of FGB

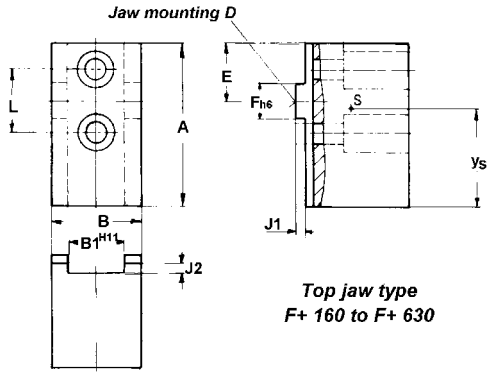

F 53

Principal dimensions of FWB

Chuck type F+	Base jaw									Soft top jaw												
	Type	Nominal dimensions				Ident.	Dimensions		Weight	Type	Nominal dimensions				Ident.	Dimensions						Weight
	FGB	A	B	C	D	No.	F	L	kg/jaw	FWB	A	B	C	D	No.	B1	E	F	J1	J2	L	kg/jaw
125	125	47	14	4	F125	70010/507	5	20	0,080	125	55	20	27,5	F125	70010/508	14	27,5	5	3,5	2,5	20	0,20
160	160	74	20	6	F160	70016/504	18	32	0,215	160	85	20	35,5	F160	70016/525	8	34	18	4,5	3	32	0,40
200	200	90	22	7	F200	70021/504	20	40	0,370	200	105	22	42	F200	70021/525	10	44	20	5	3,5	40	0,66
250	250	110	26	7	F250	70026/504	20	40	0,585	250	125	32	50	F250	70026/425	12	46	20	5	3,5	40	1,34
315	315	125	32	8	F315	70033/404	26	54	0,945	315	145	36	56	F315	70033/425	12	58	26	6	3,5	54	2,04
400	400	160	45	10	F400	70038/404	30	60	2,100	400	180	45	75	F400	70038/425	18	65	30	7	4,5	60	4,16
500	400	160	45	10	F400	70038/404	30	60	2,100	400	180	45	75	F400	70038/425	18	65	30	7	4,5	60	4,16
630	630	230	65	12	F630	70049/004	40	82	5,450	630	260	65	110	F630	70049/025	24	90	40	8	4,5	82	13,24

Order example: 1 set of base jaws FGB 200, Ident. No. 70021/504; 1 set of soft top jaws FWB 200, Ident. No. 70021/525

5.13.6 Roughing Jaws KBKTNC for External Chucking:

F 34

Roughing jaw KBKTNC

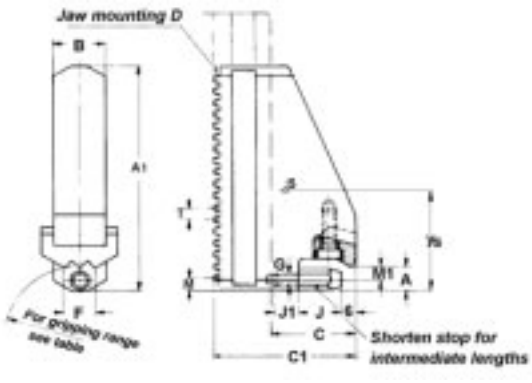

F 54

Principal dimensions of roughing jaw KBKTNC with SKA

Chuck type F+	Gripping range	max. swing diameter	Nominal dimensions Type	A	B	C	D	Ident. No.	Individual part No. Chuck jaw with stop screw	Claw insert	Principal dimensions A1	C1	F	G	J	J1	M	M1	T	Center of gravity Ys	Weight kg/jaw
160	25-53	168	KBKTNC	8	20	24	F160	45462	45462/1	45462/2	64,5	45	12,7	M4	12	8	3,2	4	4,84	31,9	0,35
	47-77	195		8				45463	45462/1	45463/2	64,5		13							31,9	0,35
	68-123	195		31				45464	45464/1	45463/2	64,5		13							38,2	0,32
	102-156	225		48				45465	45465/1	45463/2	79		13							46,2	0,35
200	32-74	260	KBKTNC	10	22	35	F200	45468	45468/1	45468/2	74,5	60	13	M5	18	10	5,43	5,5	4,89	36,5	0,58
	64-105	240		10				45469	45468/1	45469/2	74,5		13							36,5	0,58
	82-150	228		38				45470	45470/1	45469/2	74,5		13							39,5	0,54
	124-192	266		59				45471	45471/1	45469/2	94		13							55	0,61
250	45-95	260	KBKTNC	12	26	40	F250	45474	45474/1	45474/2	91	70	15	M6	20	12	6,24	6,5	6,03	44	0,97
	83-120	285		12				45475	45474/1	45475/2	91		15,5							44	0,97
	107-191	285		48				45476	45476/1	45475/2	91		15,5							51	0,90
	155-238	328		72				45477	45477/1	45475/2	115		15,5							63	1,06
315	50-130	360	KBKTNC	16	32	46	F315	45482	45482/1	4547822	130	81	19	M8	25	15	8,68	8,5	7,04	60	1,92
	95-168	398		16				45483	45482/1	45483/2	130		19,5							60	1,92
	167-284	398		78				45484	45484/1	45483/2	130		19,5							73	1,73
	250-364	476		112				45485	45485/1	45483/2	170		19,5							94	2,06
400	70-160	512	KBKTNC	20	45	52	F400	45488	45488/1	45488/2	176	93	37	M10	30	18	11,05	10,5	8,55	81	4,20
	115-251	512		50				45489	45489/1	45489/2	176		38							88	4,10
	236-372	512		111				45490	45490/1	45489/2	176		38							96	3,78
	365-498	638		175				45491	45491/1	45489/2	240		38							134	4,75
500	70-160	615	KBKTNC	20	45	52	F400	45488	45488/1	45488/2	176	93	37	M10	30	18	11,05	10,5	8,55	81	4,20
	115-352	615		50				45489	45489/1	45489/2	176		38							88	4,10
	236-474	615		111				45490	45490/1	45489/2	176		38							96	3,78
	365-550	695		175				45491	45491/1	45489/2	240		38							134	4,75

Order example: 1 set of roughing jaws KBKTNC 72-26-40-F250, Ident. No. 45477

5.13.7 Roughing Jaws KBKTNC for Internal Chucking:

F 55

Roughing jaw KBKTNC

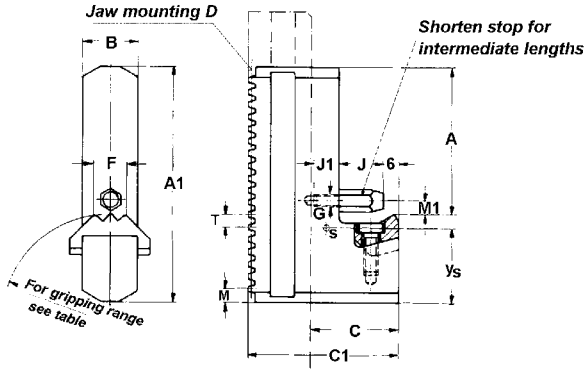

F 56

Principal dimensions of roughing jaw KBKTNC with SKI

Chuck type F+	Gripping range	max. swing diameter	Nominal dimensions Type	A	B	C	D	Ident. No.	Individual part No. Chuck jaw with stop screw	Claw insert	Principal dimensions A1	C1	F	G	J	J1	M	M1	T	Center of gravity Ys	Weight kg/jaw
160	73-128 119-174	195	KBKTNC	31 8	20	24	F160	45466 45467	45464/1 45462/1	45466/2 45467/2	64,5	45	13	M4	12	8	4,2	4	4,84	26,3 32,6	0,30 0,33
200	79-148 135-204	230	KBKTNC	38 10	22	35	F200	45472 45473	45470/1 45468/1	45472/2 45473/2	74,5	60	13	M5	18	10	5,43	5,5	4,89	35,1 38,1	0,52 0,56
250	97-181 169-253	280	KBKTNC	48 12	26	40	F250	45478 45479	45476/1 45474/1	45478/2 45479/2	91	70	15,5	M6	20	12	6,24	6,5	6,03	40,1 47,1	0,88 0,95
315	118-233 242-357	395	KBKTNC	78 16	32	46	F315	45486 45487	45484/1 45482/1	45486/2 45487/2	130	81	19,5	M8	25	15	8,68	8,5	7,04	57,1 70,1	1,70 2,12
400	145-281 264-404 324-464	510	KBKTNC	111 50 20	45	52	F400	45492 45493 45494	45490/1 45489/1 45488/1	45492/2 45493/2 45493/2	176	93	38 39 39	M10	30	18	11,05	10,5	8,55	80,1 88,1 95,1	3,73 4,05 4,15
500	145-384 264-506 324-566	615	KBKTNC	111 50 20	45	52	F400	45492 45493 45494	45490/1 45489/1 45488/1	45492/2 45493/2 45493/2	176	93	38 39 39	M10	30	18	11,05	10,5	8,55	80,1 88,1 95,1	3,73 4,05 4,15

Order example: 1 set of roughing jaws KBKTNC 48-26-40-F250, Ident. No. 45478

5.13.8 Chuck Handling Hooks:

F 57

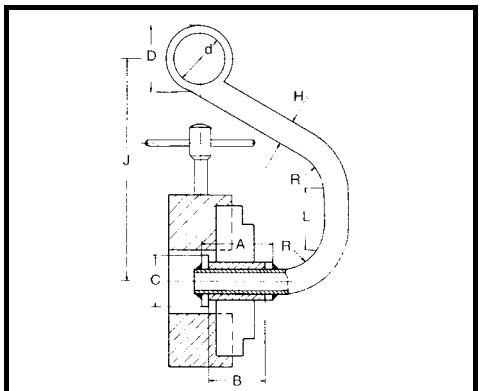

F 58

Typ	FH 100	FH 400
Ident. No.	70767	70768
carrying strength Q	100 kg	400 kg
A	220	280
B	200	250
C	¢ 55	¢ 75
D	¢ 115	¢ 180
H	¢ 33,7x3,25	¢48,3x5
J	580	830
L	200	320
d	¢ 75	¢ 120
R	100	195

Manual chucks, independent jaw chucks and power chucks can be easily and safely fitted to and removed from lathes using the FORKARDT chuck hook. The chuck hook is equipped with a pivoting bush to which the manual chuck is firmly secured.

The chuck can then be easily screwed onto or from the thread of a draw tube. Fitting is also facilitated for short taper mounting.
The mounting elements such as studs or Camlock studs can then be moved to the right position to allow the manual chuck to be pushed onto spindle nose.

Order example:
1 chuck hook FH 400, Ident. No. 70768.

5.13.9 Clamping Rings MFW:

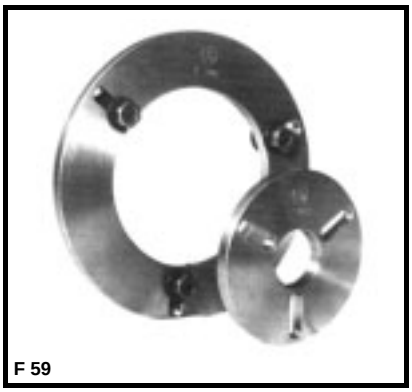

F 59

The MFW clamping rings are used for turning out soft top jaws. Soft top jaws turned out to the workpiece diameter are a precondition for precision machining without damaging the workpiece surface. MFW clamping rings meet all the demands in practice.
Studs are positioned in radial slots which engage with the cylindrical journal in the bolt holes of the soft top jaws. The necessary precision can only be achieved if the jaws are turned out whilst the gripping force is being applied.

Clamping ring for chucks	Clamping ring type (1 set)	Ident. No.
F 125	MFW 125	70490
F 160	MFW 160	70491
F 200	MFW 200	70492
F 250	MFW 250	70493
F 315	MFW 315	70494
F 400	MFW 400	70495
F 500	MFW 500	70496
F 630	MFW 630	70497

Order example:
1 Clamping ring MFW 250, Ident. No. 70768.

5.13.10 Jaw Dressing Rings FADR:

A further proven aid for turning out top jaws are the FADR jaw dressing rings. They are supplied as a set, clearly arranged on a perforated plate. One set comprises 36 individual rings with diameters from 20 to 50mm in increments of 2mm and diameters from 50 to 150mm in increments of 5mm. Two studs facilitate the reliable insertion of the smaller rings. The jaw dressing rings are hardened and can be used for turning out all soft top jaws. Reworking of the rings is possible. See also publication 990.01.5D, Accessories for manual and power chucks.

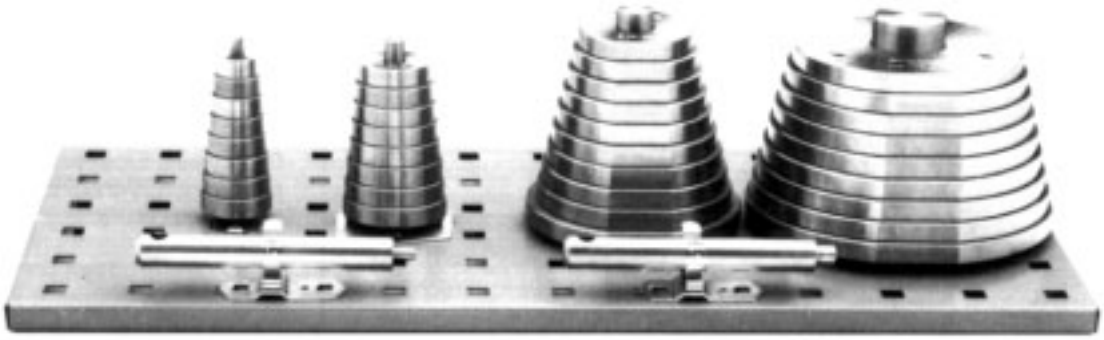

F 60

5.13.11 Torque Amplifier DMV:

F 61

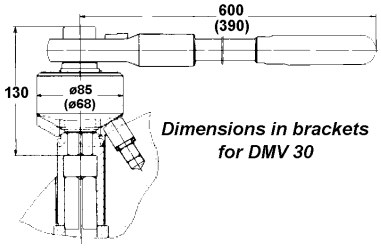

F 62

Type	Ident. No.	for chuck size	Torque on output side	Weight
DMV 30	45170	F250 to F400	300 Nm	2,6 kg
Nut for:				
SW 14	46694/2	F 250		
SW 16	46487/2	F 315		
SW 19	46738/2	F 400		
DMV 50	44476	from F400	500 Nm	5,2 kg
Nut for:				
SW 19	43569/2	F 400		
SW 19	43866/2	F 500		
SW 24	43867/2	F 630		

The strength of the operator for turning the chuck key is limited for actuating larger manual chucks: With normal lubrication of the manual chuck, around 160 nm for strong and 200 Nm for difficult tightening produce between 10 and 12 Mp gripping force.

On modern lathes surrounded by panellings, long-arm chuck keys can no longer be used. FORKARDT supplies torque amplifiers for such applications.

The torque amplifier is available in two sizes. The force amplification in each case is 4 : 1. The chuck is pretightened using a normal chuck key, then fully tightened using the torque amplifier. High workpiece gripping forces are thus achieved witout excessive physical effort and with no danger to the operator's health.

5.13.12 Gripping Force Meter SKM:

Soiling and the washing out of the lubricant film during wet work cause chucks to lose a significant proportion of their efficiency and thus their gripping force. Furthermore, particular attention also has to be paid to the loss of gripping force resulting from the centrifugal forces on the jaws at high spindle speeds. For this reason, FORKARDT offers the gripping force meters SKM 1200 and SKM 1500 for measuring the static gripping force and FORSAVE - D for measuring the dynamic gripping force. The gripping force meters should be used regularly to check whether the available gripping force is still sufficient for the intended machining operation, or whether the chuck requires cleaning and lubricating. Gripping force meters SKM 1200 and SKM 1500, see publication 300224.10.01E. Gripping force meter FORSAVE - D, see publication

6.1 General:

The chuck transmits the spindle torque to the workpiece by means of the frictional grip of the top jaws pressed against the workpiece. The jaw force required to produce this frictional grip is called the gripping force.
The gripping force is affected, directly or indirectly, by various factors:

* The variation in the coefficient of friction betwee workpiece and top jaw.
* The ratio between gripping diameter and machining diameter.
* The magnitude of the cutting force applied by the tool.
* The distance of the top jaws from the machining point.
* The reduction in the gripping force due to the centrifugal force on the jaws in the case of external chucking.

Rotating workholding equipment is subject to the effect of centrifugal force which that increases with the square of the spindle speed. The centrifugal force opposes the gripping force in the case of external chucking, whilst increasing it in the case of internal chucking.
The residual dynamic gripping force of the jaws for holding the workpiece at high spindle speeds depends on the static gripping force, the mass of the top jaws and the radius of their center of gravity.

6.2 Gripping Force:

The max. static gripping force Fspmax (= Fspo) quoted in the table in section 1.4 is only achieved under favourable conditions. These are:

* A well maintained manual chuck.
* Optimum lubrication of all sliding surfaces.
* Application of maximum torque on the chuck key.
* Short overhang of the chuck jaws.
* Spindle stationary n = 0 (or low spindle speed).

The static gripping force is measured using a static gripping force meter, e.g. SKM 1200 / 1500, see publication 300224.10.01E. The figure given in the table for Fspmax (see Section 1.4, page 4) can be used for strength calculations, e.g. for the design of special jaws.

6.3 Dynamic Gripping Force Fsp:

The dynamic gripping force ***Fsp*** is the total gripping force (in daN) supplied ***by all*** the jaws under dynamic conditions and represents the minimum value for the available gripping force under normal operating conditions.
Implied are:
Â well maintained condition and
Â adequate lubrication of all sliding surfaces
of the manual chuck.
In really good condition, the manual chuck will exceed the calculated value for Fsp.

The static gripping force is a function of the manual chuck design data, but is not the sole determining factor for the gripping force under dynamic conditions. The top jaws have a significant influence on the performance of a manual chuck. The choice of the top jaws to be used for a particular application depends on the conditions of the specific application. The top jaws influence the gripping force and thus also the spindle speed.
The rated spindle speed (in accordance with standard DIN 6386) for manual chuck Type F+ is the spindle speed at which the calculated centrifugal force generated by the heaviest design of jaws belonging to the chuck equals 2/3 of the static gripping force produced by application of the maximum actuating force.

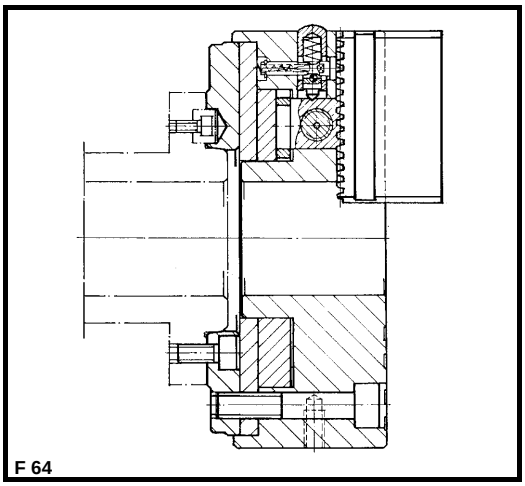
F 64

For the Type F+ manual chuck, the rated spindle speed is based on the use of FMB soft monoblock jaws which are ***flush*** with the outside diameter of the chuck, see Figure F 64. At the rated spindle speed therefore, 1/3 of the static gripping force is still available for gripping the workpiece.

The centrifugal force generated by the chuck jaws (base jaws and top jaws) during rotation of the manual chuck does not, however, result in a loss of gripping force of the same magnitude. For solid workpieces (i.e. workpieces without bore), the loss of gripping force amounts to approx. ***67% of the centrifugal force***.

The following formulae apply to the calculation of the gripping force and the actual loss of gripping force ÷Fsp for the manual chuck Type F+ :

$$\mathbf{Fsp = Fspo \pm \div Fsp} \qquad ❶$$

The available static gripping force Fspo (at spindle speed n = 0) is:

$$\mathbf{Fspo} = \frac{C1}{C2\ 2\ a} \times \mathbf{Md} \qquad ❷$$

The maximum torque to be input into this formula is the torque Mdmax from the table on page 4.

and the loss of gripping force ÷ Fsp at working speed n is:

$$\mathbf{\div Fsp = \pm 0{,}0008 \times \left(\frac{Ra \times G \times i}{1000}\right) \times n^2} \qquad ❸$$

+ for internal chucking
- for external chucking

The dynamic gripping force Fsp is then:

$$\mathbf{Fsp} = \frac{C1}{C2\ 2\ a} \times \mathbf{Md \pm 0{,}0008 \times \left(\frac{Ra \times G \times i}{1000}\right) \times n^2} \qquad ❹$$

The total centrifugal moment of the jaws Ma is calculated as:

$$\mathbf{Ma} = \frac{\left(\frac{Dsp}{2} \partial Y_{AB}\right) \times G \times i}{1000} \qquad ❺$$

Symbols used in the formulae:

Fsp = Dynamic gripping force [daN], the total dynamic gripping force applied by all the jaws
C1, C2 = Chuck constants
Md = Torque applied with the chuck key [Nm]
n = Spindle speed [rpm]
Ma = Total centrifugal moment of the chuck jaws [kgm]
Dsp = Gripping diameter [mm]
Y_{AB} = Distance of center of gravity of jaw from gripping diameter [mm]
a = Jaw overhang [mm]
i = Number of top jaws
G = Mass of each top jaw [kg]
Ra = Distance of center of gravity of jaw from center of chuck [mm]

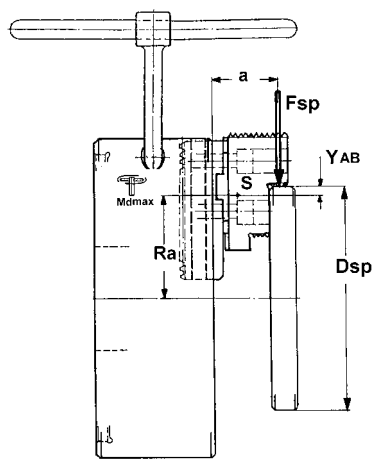

F 65

For each application it is necessary to check that the available dynamic gripping force is adequate.
In the case of chuck jaws made from soft FMB monoblock jaws or other special jaws, the actual centrifugal moment must be determined ***by weighing*** and ***by measuring*** the distance of the center of grvity from the center of the chuck ***Ra***.

See Figure F 38 ➡

Determinationof the center of gravity

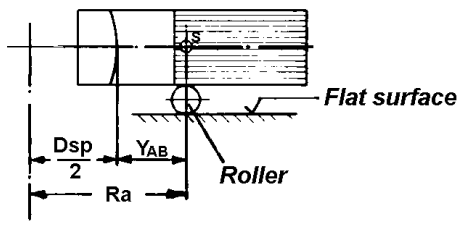

F 38

When working with high spindle speeds, soft monoblock jaws (FWB or FMB) must be weight-optimised as far as possible whilst maintaining a short jaw overhang.

Determine the weight and center of gravity of the finished jaws and check whether the remaining dynamic gripping force of the manual chuck is adequate for the machining work to be carried out. See formula 4 on page 30.

If the calculated dynamic gripping force Fsp proves to be inadequate for the machining work, the spindle speed must be reduced (see formula 8 on page 34) or the weight of the chuck jaws must be reduced (see formula 7 on page 34).

The permissible spindle speed for the manual chuck with the corresponding jaws or the curve of the dynamic gripping force over spindle speed must be calculated for each application.

6.3.1 ⚠ Safety Instructions:

* ***Check that the gripping force of the chuck is adequate for the machining operation under the chosen operating conditions.***
* ***The calculated gripping forces are only achieved with the chuck in a well-maintained condition (the gripping force may be even higher than the calculated value in the case of a freshly lubricated chuck).***
* ***Use light top jaws at high spindle speeds.***
* ***During rotation of the manual chuck, use a dynamic gripping force meter, e.g. FORSAVE D, to measure the dynamic gripping force.***
* ***Determine the loss of gripping force under dynamic conditions at every changeover to ensure that the gripping force is adequate for the intended machining operation.***
* ***If the gripping force measured with the dynamic gripping force meter falls below the specified value, the manual chuck must be lubricated.***
  See also Section 9.2.
* ***In accordance with the regulations of the factory inspectorate, operation of machinery at high spindle speeds may only be carried out under adequately dimensioned safety guards! The guards must be closed and locked as long as the machine is running!***

6.4 Specimen Calculations:

Example 1:

Manual chuck type		: F+ 250
Max. torque Mdmax		: 190 Nm
Jaws		: KBKTNC 72-26-40
Gripping diameter	Dsp	: 220 mm
Spindle speed	n	: 3500 min^{-1}
Chuck constant	C 1	: 31100
Chuck constant	C 2	: 390
Jaw overhang	a	: 37 mm
Number of jaws	i	: 3

How high is the static gripping force (n = 0) and the dynamic gripping force (n = 3500 rpm) to hold the workpiece?

Dsp = 220 mm

Y_{AB} = + 3 mm

Jaw weight G = 1,06 kg / jaw

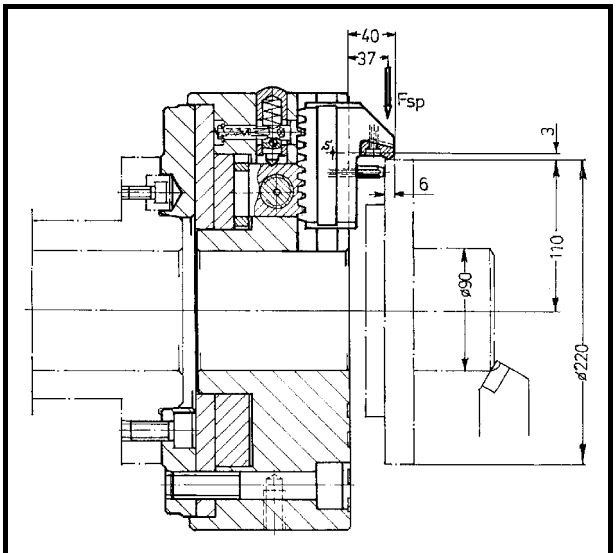

F 66

Radius of the center of gravity Ra:

$$Ra = \frac{Dsp}{2} + Y_{AB} = \frac{220}{2} + 3 = 113mm$$

Total centrifugal moment Ma:

$$Ma = \frac{Ra \times G \times i}{1000} = \frac{113 \times 1{,}06 \times 3}{1000} = 0{,}36 \text{ kgm}$$

Static gripping force (n = 0):

$$Fspo = \frac{C1}{C2 + a} \times Md$$

$$\frac{31100}{390+56{,}5} \times 190 = 13234 \text{ daN}$$

Dynamic gripping force (n = 3500 rpm) :

$$Fsp = Fspo - 0{,}0008 \times Ma \times n^2$$

$$Fsp = 14518 - 0{,}0008 \times 0{,}36 \times 3500^2$$

$$Fsp = 14518 - 3552 = 10966 \text{ daN}$$

Example: Material 42 CrMo 4V

la = 60mm Dsp = 220mm v = 250m / min
a = 10mm µsp = 0,35 nz = 2650 rpm
s = 0,63 Sz = 2 Fspz = 5000 daN
dz = 30mm Ks = 1919 N / mm²

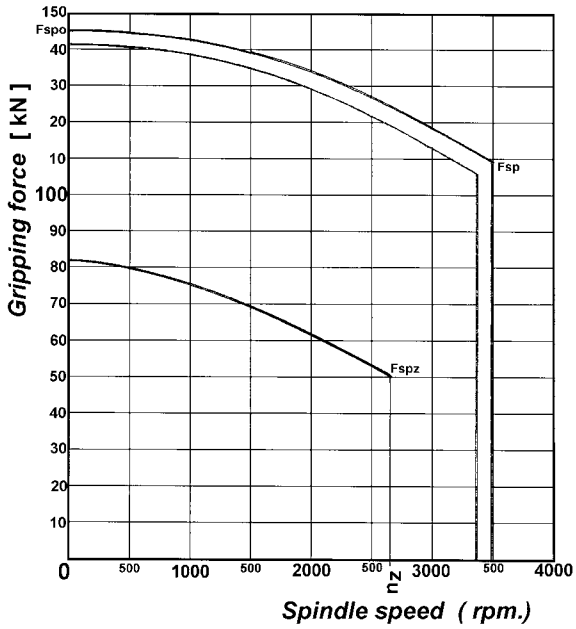

F 67

Example 2:

Manual chuck type		: F+ 250
Max. torque Mdmax		: 190 Nm
Jaws		: Jaw unit FGB 250 and FHB 250
Gripping diameter	Dsp	: 220 mm
Spindle speed	n	: 3800 rpm
Chuck constant	C 1	: 31100
Chuck constant	C 2	: 390
Jaw overhang	a	: 56,5 mm
Number of jaws	i	: 3

How high is the static gripping force (n = 0) and the dynamic gripping force (n = 3800rpm) to hold the workpiece ?

From the table on page 24 (Section 5.13.4)
Dsp = 220mm, gripping stage A4 (167 to 252mm)
Jaw weight G= 1,40 kg / unit

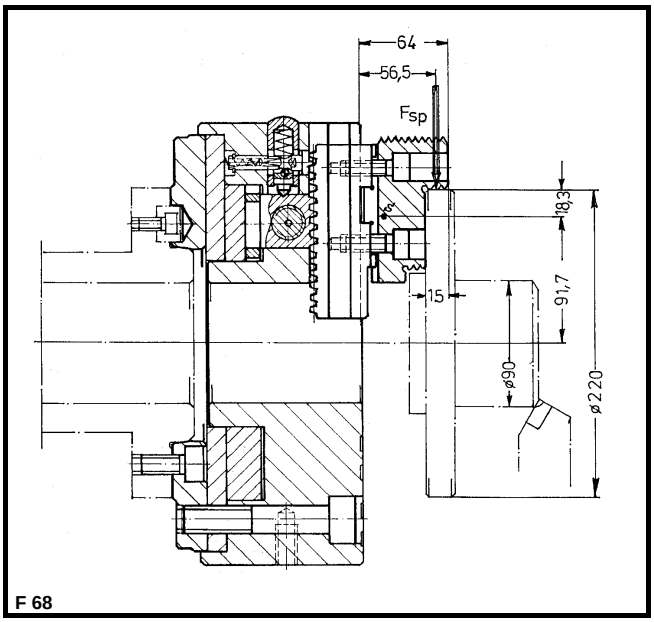

F 68

Radius of the center of gravity Ra:

$$Ra = \frac{Dsp}{2} - Y_{AB} = \frac{220}{2} - 9{,}07 = 100{,}93\,mm$$

Total centrifugal moment Ma:

$$Ma = \frac{Ra \times G \times i}{1000} = \frac{100{,}93 \times 1{,}4 \times 3}{1000} = 0{,}424\ kgm$$

Static gripping force (n = 0):

$$Fspo = \frac{C1}{C2 + a} \times Md$$

$$\frac{31100}{390+56{,}5} \times 190 = 13234\ daN$$

Dynamic gripping force (n = 3800 rpm) :

$$Fsp = Fspo - 0{,}0008 \times Ma \times n^2$$

$$Fsp = 13234 - 0{,}0008 \times 0{,}424 \times 3800^2$$

$$Fsp = 13234 - 4909$$

$$Fsp = 8325\ daN$$

Example: Material 42 CrMo 4V

la = 60mm Dsp = 220mm v = 250m / min
a = 10mm µsp = 0,20 nz = 3000 rpm
s = 0,63 Sz = 2 Fspz = 5800 daN
dz = 30mm Ks = 1919 N / mm²

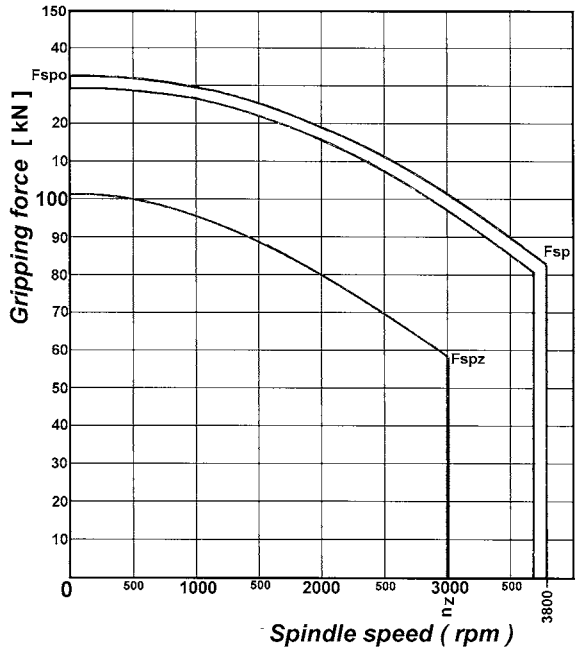

F 69

Example 3:

Manual chuck type		: F+ 250
Max. torque Mdmax		: 190 Nm
Max. required gripping force Fspz at working speed		: 6500 daN
Jaws		: Base jaw FGB 250 and special top jaw
Gripping diameter	Dsp	: 220 mm
Spindle speed	n	: 3800 rpm
Chuck constant	C 1	: 31100
Chuck constant	C 2	: 390
Jaw overhang	a	: 65 mm
Number of jaws	i	: 3

Weight of base jaw G1 = 0,74 kg / jaw, distance of center of gravity from chuck center Rs_1:104,5mm. Weight of special top jaw G_2 = 1,9kg / jaw, distance of center of gravity from chuck center Rs_2: 122mm.

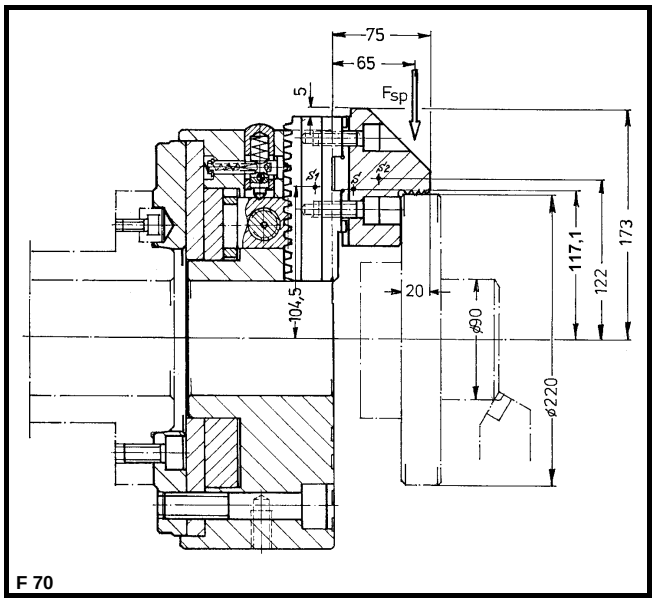

F 70

Radius of the center of gravity Rs:

$$Rs = \frac{G1 \times Rs1 + G2 \times Rs2}{G1 + G2} = \frac{0{,}74 \times 104{,}5 + 1{,}9 \times 122}{0{,}74 + 1{,}9} \quad ❻$$

$$Rs = 117{,}1mm$$

Total centrifugal moment Ma:

$$Ma = \frac{Rs \; x \; G \; x \; i}{1000} = \frac{117{,}1 \times 2{,}64 \times 3}{1000} = 0{,}927kgm$$

Static gripping force (n = 0):

$$Fspo = \frac{C1}{C2 + a} \times Md$$

$$\frac{31100}{390 + 65} \times 190 = 12986 \text{ daN}$$

Dynamic gripping force (n = 3800 rpm) :

$$Fsp = Fspo - 0{,}0008 \times Ma \times n^2$$

$$Fsp = 12986 - 0{,}0008 \times 0{,}927 \times 3800^2$$

$$Fsp = 12986 - 10830 = 2156 \text{ daN}$$

Example : Material 42 CrMo 4V

la = 60mm Dsp = 220mm v = 250m / min
a = 2mm µsp = 0,35 nz = 2957 rpm
s = 0,25 Sz = 2 Fspz = 6500 daN
dz = 30mm Ks = 2249 N / mm²

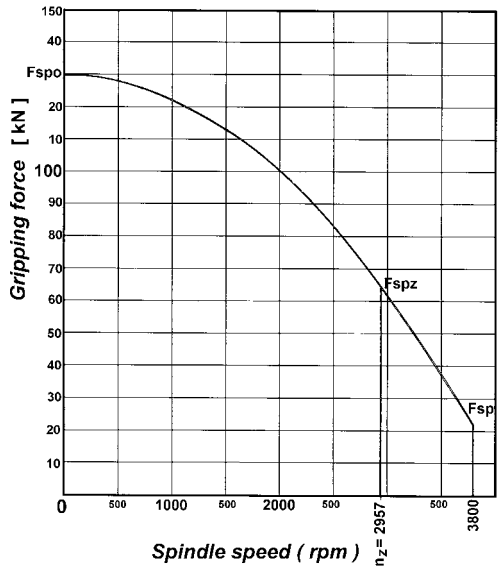

F 71

Calculation of permissible values:

$$Ma_{zul} = \frac{\left(\frac{C1}{C2 + a} \times Md\right) - Fspz}{0{,}0008 \times n^2} \quad ❼$$

$$Ma_{zul} = \frac{\left(\frac{31100}{390 + 65} \times 190\right) - 6500}{0{,}0008 \times 3800^2} = 0{,}561 \text{ kgm}$$

Since the centrifugal moment Maperm. Of the special top jaws is exceeded, the permissible spindle speed must be reduced according to the following formula:

$$n_{zul} = \sqrt{\frac{\left(\frac{C1}{C2 + a} \times Md\right) - Fspz}{0{,}0008 \times Ma}} \quad ❽$$

$$n_{zul} = \sqrt{\frac{\left(\frac{31100}{390 + 65} \times 190\right) - 6500}{0{,}0008 \times 0{,}927}} = 2957 \text{ min}^{-1}$$

The spindle speed must be reduced to 2957 rpm in order to ensure an adequate dynamic gripping force for the machining operation.

6.5 Determination of the Gripping Force Fspz Required for a Specific Application:

The gripping force required for each application has to be determined. If this gripping force cannot be provided by the chuck with the factors of safety given by the guidelines of the German Association of Engineers VDI 3106, then the permissible spindle speed or the permissible chip cross-section has to be determined.
Herewith an example:
A solid steel workpiece (i.e. without bore) has to be machined. The gripping diameter dsp=60mm, the turning diameter dz =60mm and the cut requires a tangential cutting force Fs=1200daN at a spindle speed of 2760rpm.
Soft jaws turned to the gripping diameter are used to avoid damaging the workpiece. This gives a gripping coefficient of µsp=0,1.
A safety factor Sz is allowed for the cutting data. The reduction in gripping force Fsp amounts to 2000 daN.

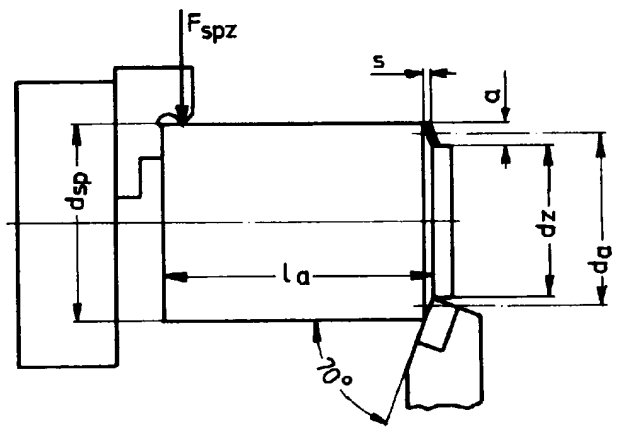

F 72

For this example therefore: when taking into account the reduction in gripping force Fsp, the minimum static gripping force required is:

Fsp min=Fspz+Fsp=2000+2000=4000daN.

The " feed thrust Fv " and the " passive force Fp " components do not enter into this formula.They are taken into account in the safety factor Sz.The main variable affecting the gripping force is the tangential cutting force Fs, which can be determined from the chip cross - section and the specific cutting force:

Fs = a x s x ks

The gripping force necessary for the machining operation is given by:

$$Fspz = \frac{Fs \times dz}{\mu sp \times dsp} = \frac{a \times s \times ks \times dz}{\mu sp \times dsp} \quad 1)$$

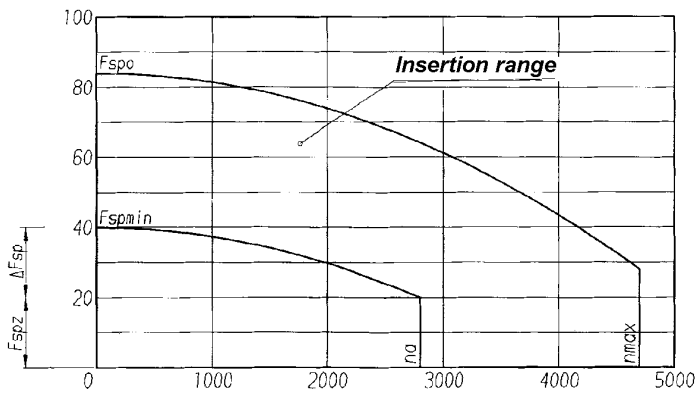

F 73

Where:

la = Overhang of workpiece
a = Depth of cut
s = Feed
Ks = Specific cutting force
dz = Machining diameter
dsp = Gripping diameter
µsp = Gripping coefficient
Fs = Tangential cutting force
(i.e. primary cutting force)

The cutting forces increase as the cutting tool becomes dull. An additional factor of safety Sz=2 is recommended to allow for all uncertainties in the machining process.

Gripping coefficient µsp

Type of jaws	Workpiece material	Finish of gripped workpiece surface ▼▼▼	▼▼, ▼	⅄
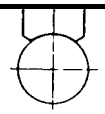 Finishing jaws	Steel	0,1	0,15	- 1)
	Aluminium	0,1	0,14	-
	Brass	0,09	0,14	-
	Cast Iron	0,08	0,12	-
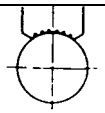 Block pattern jaws 2)	Steel	0,12	0,20	0,32
	Aluminium	0,11	0,19	0,30
	Brass	0,11	0,18	0,27
	Cast Iron	0,10	0,16	0,26
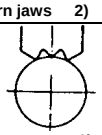 Roughing jaws 2)	Steel	0,25	0,35	0,50
	Aluminium	0,24	0,33	0,48
	Brass	0,23	0,32	0,45
	Cast Iron	0,20	0,28	0,40

1) Avoid, smooth jaws are only suitable for gripping machined surfaces.
2) Identations will be produced on the workpiece. Their depth depends on the gripping force.

The gripping force must be increased to allow for the tilting effect caused by the overhang la.

The tilting force need not be taken into account if the workpiece is supported by a tailstock or if the workpiece does not project beyond the jaws by more than 0,5 x dsp.
The gripping force Fspz required can be found approximately from the formula:

$$Fspz = Sz \times \frac{a \times s \times Ks \times dz}{\mu sp \times dsp} \times \left(1 + 1{,}5 \times \frac{la}{dsp}\right)$$

Tilting factor:

$$\left(1 + 1{,}5 \times \frac{la}{dsp}\right)$$

This equation cannot be applied to stepped workpieces whose gripping diameter is appreciably smaller than the machining diameter.

1) The „feed thrust Fv“ and „passive thrust Fp“ components are not entered into this formula. They are taken into account with the safety factor, Sz.

Specific cutting force Ks (N / mm²)at feed s and tool cutting edge angle of 70⁰ (source: König and Essel)

Material No.	Material	Tensile strenght N / mm²	at v= m/min	Feed s (mm) 0,16	0,25	0,40	0,63	1,00	1,60
1.0401	C15G	373	100	2482	2189	1918	1687	1481	1298
1.0501	C35G	490	100	2577	2237	1927	1668	1441	1241
1.0532	St50-2	559	100	2561	2248	1959	1716	1499	1307
1.0632	St70-2	824	100	2877	2492	2142	1851	1595	1371
1.0711	9S20	373	100	1609	1553	1497	1444	1393	1342
1.1181	Ck35V	622	100	2574	2266	1982	1741	1527	1335
1.1191	Ck45V	765	100	2524	2253	1999	1781	1584	1405
1.1221	Ck60V	873	100	2548	2296	2058	1851	1662	1490
1.3505	100Cr6G	624	100	2904	2558	2239	1968	1726	1510
1.4113	X6CrMo17G	505	100	2378	2107	1854	1638	1445	1272
1.4305	X12CrNiS18.8	638	350	2596	2192	1835	1545	1296	1085
1.5752	14NiCr14BF	658	100	2249	2012	1790	1598	1424	1266
1.5919	15CrNi6	510	100	2271	2051	1842	1661	1494	1342
1.5920	18CrNi8G	578	100	2360	2095	1847	1636	1446	1276
1.7131	16MnCr5G	510	100	2641	2244	1891	1603	1354	1141
1.7147	20MnCr5G	568	100	2452	2174	1915	1694	1495	1317
1.7225	42CrMo4V	1138	100	2428	2249	2075	1919	1773	1635
1.8515	31CrMo12V	1060	100	2678	2419	2173	1960	1764	1585
1.8519	31CrMoV9V	931	100	2507	2265	2036	1836	1653	1485
3.1354	AlCuMg2	15Hv10	200	953	849	752	668	593	525
--	G-AlMg4SiMn	260	200	829	729	636	558	--	--
3.3561.01	G-AlMg5	75HV10	200	886	797	713	641	574	514
0.6020	GG-20	178HB	200	1687	1444	1227	1047	892	757
0.6030	GG-30	206HB	100	1919	1595	1313	1088	899	740
0.7050	GGG 50	194HB	200	1840	1606	1392	1213	1053	913

6.6 Permissible Overhang Length:

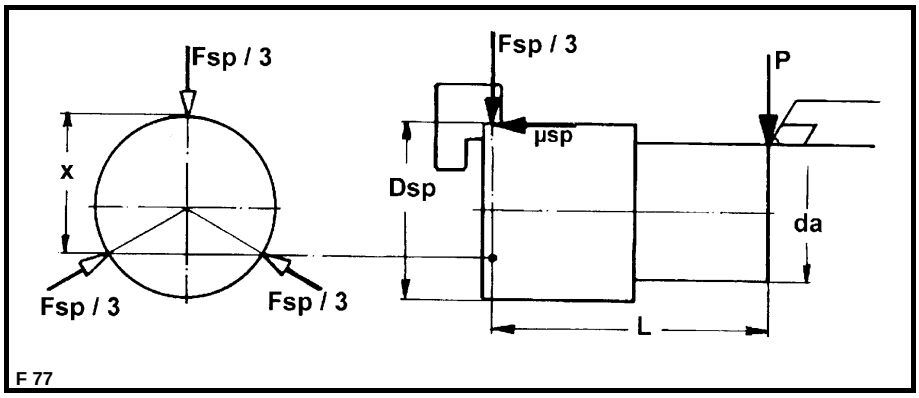

Where:
X = 0,75 Dsp
Fsp = Total gripping force
= Σ jaw forces
Simple safety against the workpiece flying out of the chuck from the cutting force component P is ensured when the friction force μsp x Fsp / 3 and P are in equilibrium.

1) P x L = μsp x Fsp / 3 x X = 0,25 x Fsp x Dsp x μsp

The gripping force required to prevent tilting out of the chuck:

$$Fsp_1 = P \times \frac{4 \times L}{Dsp \times \mu sp}$$

$$Pmax = Fsp \times \frac{Dsp \times \mu sp}{4 \times L}$$

The gripping force required for driving:

$$Fsp_2 = P \times \frac{da}{Dsp \times \mu sp}$$

The gripping force required:

$$Fsp = S \times \frac{P}{\mu sp} \times \frac{(da + 4 \times L)}{Dsp}$$

S = Safety factor

Permissible overhang length with given gripping force:

$$L = 0{,}25 \times \left(Dsp \times \frac{Fsp \times \mu sp}{P \times S} - da\right)$$

6.7 Gripping Force Curve with Hard FHB Top Jaw:

Hard top jaw FHB 160 on F+ 160 as a function of the spindle speed and static gripping force Fspo at max. gripping diameter, gripping stage A4, total centrifugal moment from base jaws and top jaws is 0,105 kgm.

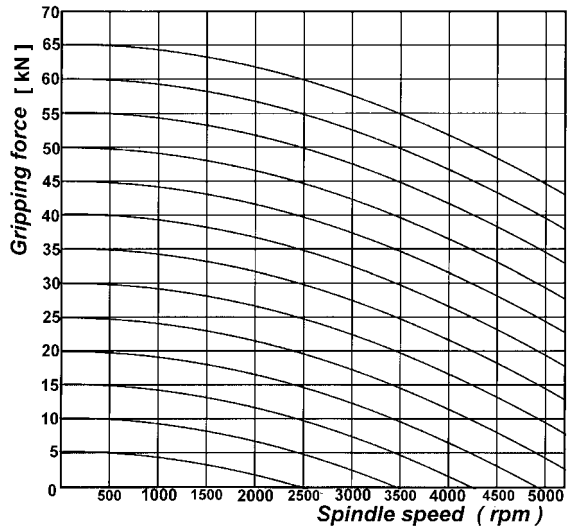

F 78

Hard top jaw FHB 200 on F+ 200 as a function of the spindle speed and static gripping force Fspo at max. gripping diameter, gripping stage A4, total centrifugal moment from base jaws and top jaws is 0,192 kgm.

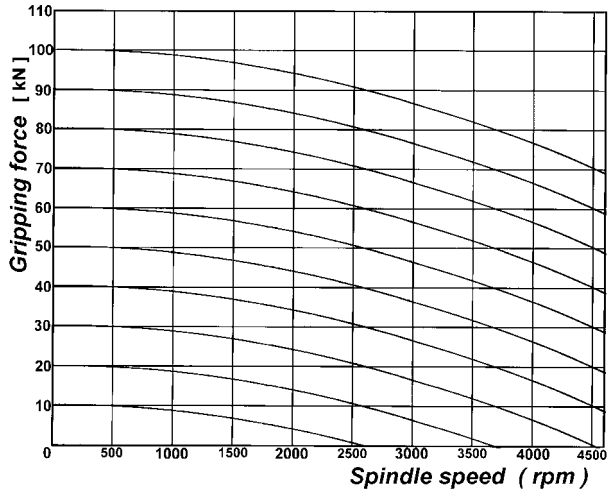

F 79

Hard top jaw FHB 250 on F+ 250 as a function of the spindle speed and static gripping force Fspo at max. gripping diameter, gripping stage A4, total centrifugal moment from base jaws and top jaws is 0,491 kgm.

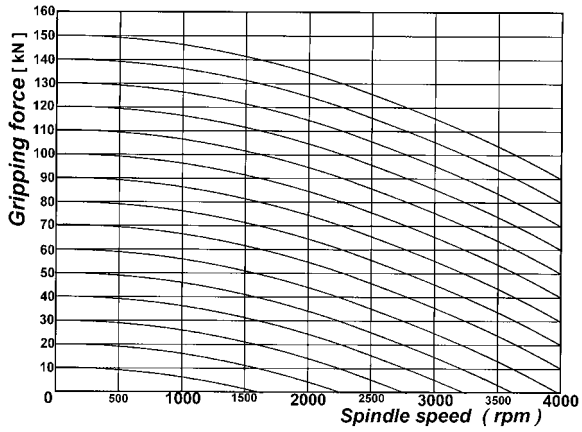

F 80

Hard top jaw FHB 315 on F+ 315 as a function of the spindle speed and static gripping force Fspo at max. gripping diameter, gripping stage A4, total centrifugal moment from base jaws and top jaws is 0,883 kgm.

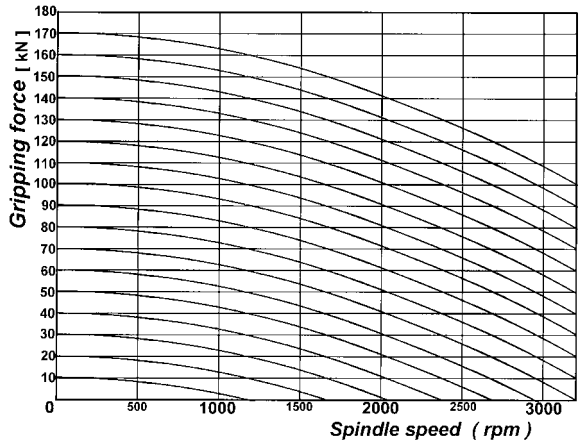

F 81

Hard top jaw FHB 400 on F+ 400 as a function of the spindle speed and static gripping force Fspo at max. gripping diameter, gripping stage A4, total centrifugal moment from base jaws and top jaws is 2,579 kgm.

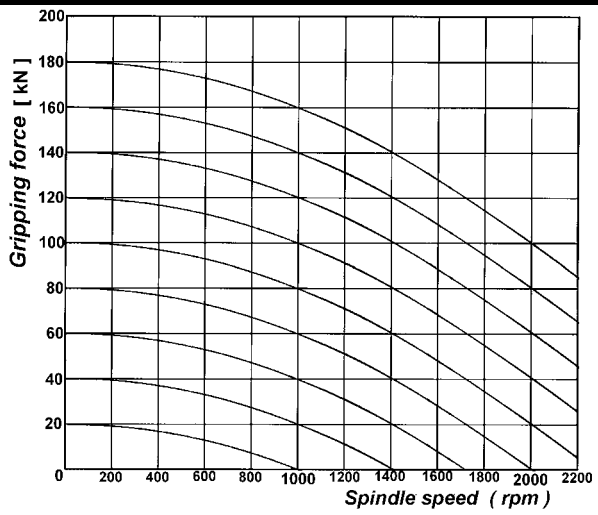

F 82

Hard top jaw FHB 500 on F+ 500 as a function of the spindle speed and static gripping force Fspo at max. gripping diameter, gripping stage A4, total centrifugal moment from base jaws and top jaws is 4,882 kgm.

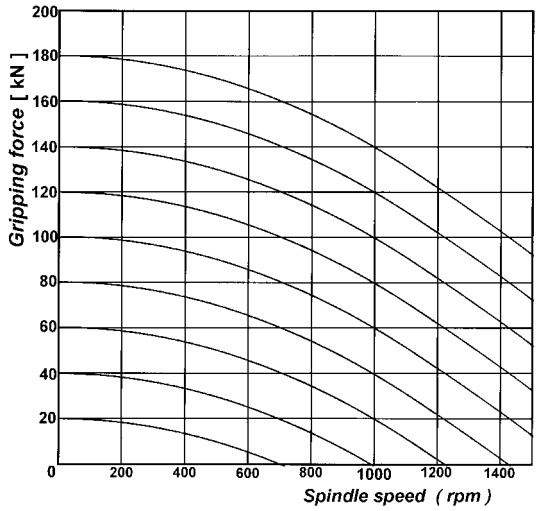

F 83

Hard top jaw FHB 630 on F+ 630 as a function of the spindle speed and static gripping force Fspo at max. gripping diameter, gripping stage A4, total centrifugal moment from base jaws and top jaws is 10,850 kgm.

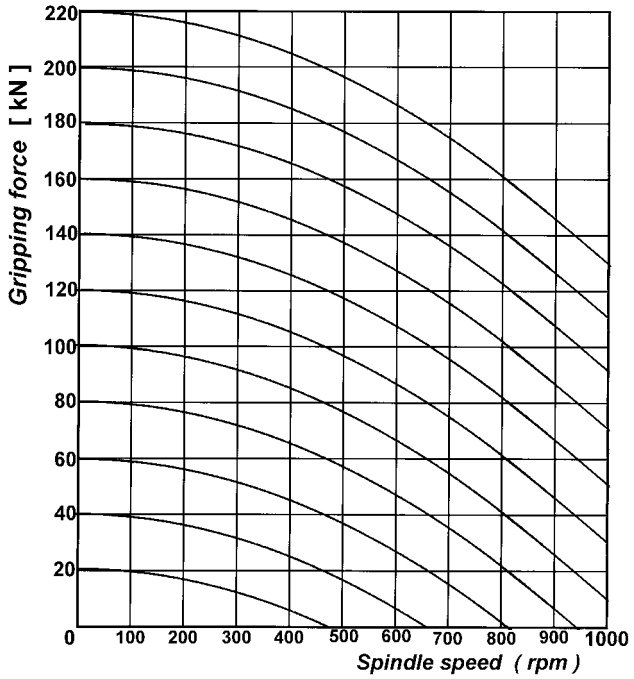

F 84

F

Hard top jaw FHB 315 on F+ 315 as a function of the spindle speed and static gripping force Fspo at max. gripping diameter, gripping stage A4, total centrifugal moment from base jaws and top jaws is 0,883 kgm.

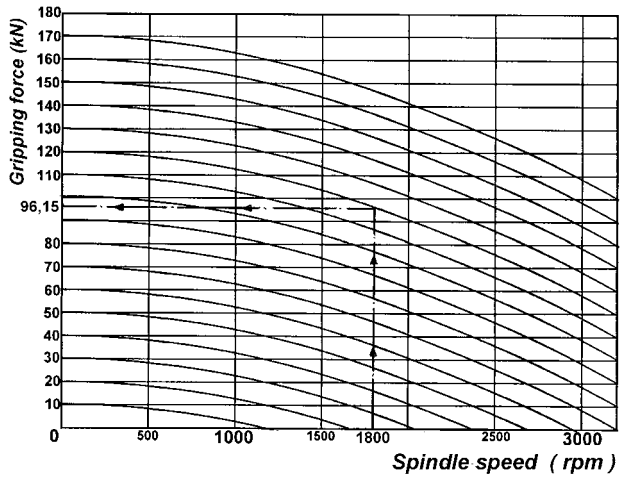

F 85

Example:

The gripping diameter Dsp = 321mm, the static gripping force Fspo = 120 kN, spindle speed n = 1800 rpm. What is the dynamic gripping force and the gripping force loss at spindle speed n = 1800 rpm?

The dynamic gripping force is 9615 daN, the gripping force loss is 2385 daN.

6.8 Gripping Force Curve with Hard FStB Stepped Jaws:

Hard stepped jaw FStB 125 on F+ 125 as a function of the spindle speed and static gripping force Fspo at max. gripping diameter, gripping stage A4, total centrifugal moment of all three stepped jaws is 0,018 kgm.

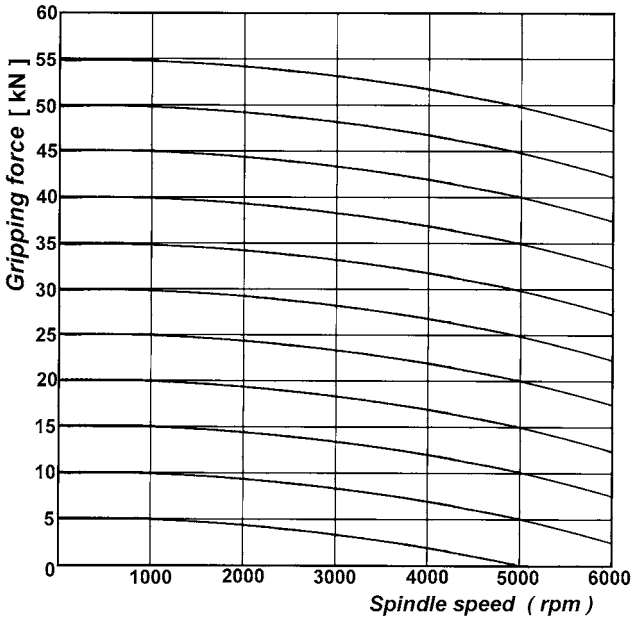

F 86

Hard stepped jaw FStB 160 on F+ 160 as a function of the spindle speed and static gripping force Fspo at max. gripping diameter, gripping stage A4, total centrifugal moment of all three stepped jaws is 0,078 kgm.

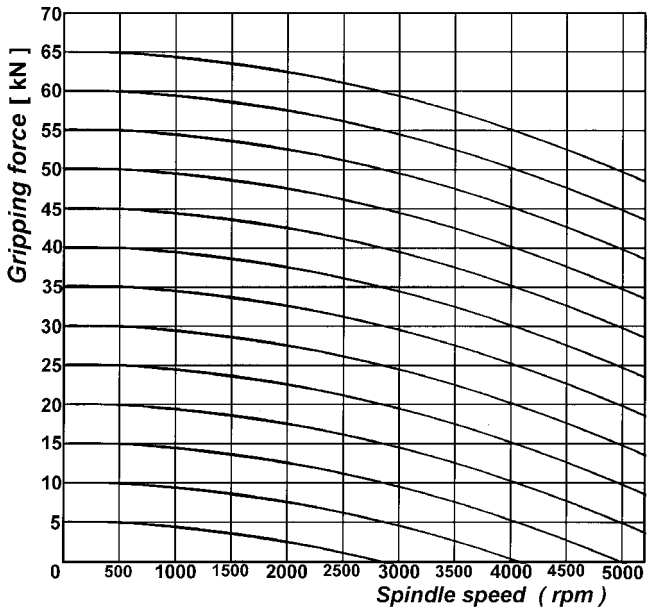

F 87

Hard stepped jaw FStB 200 on F+ 200 as a function of the spindle speed and static gripping force Fspo at max. gripping diameter, gripping stage A4, total centrifugal moment of all three stepped jaws is 0,176 kgm.

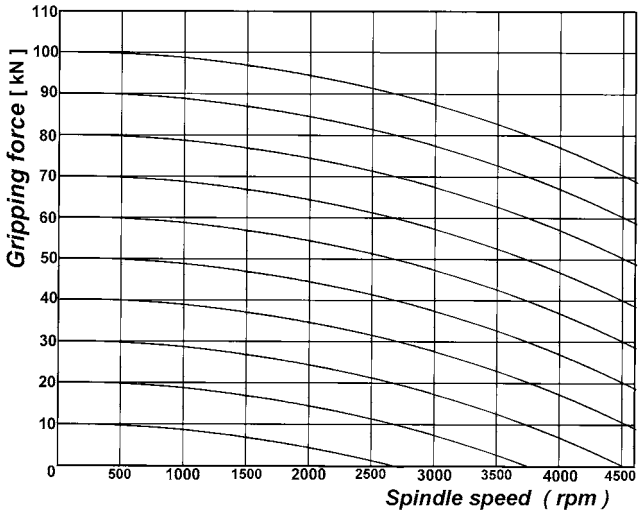

F 88

Hard stepped jaw FStB 250 on F+ 250 as a function of the spindle speed and static gripping force Fspo at max. gripping diameter, gripping stage A4, total centrifugal moment of all three stepped jaws is 0,370 kgm.

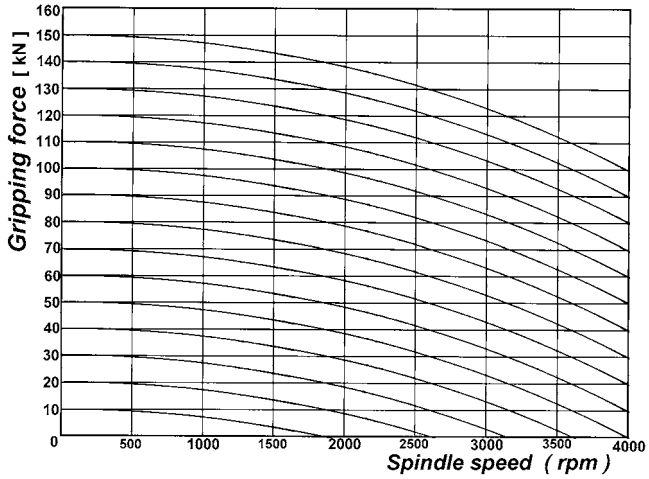

F 89

Hard stepped jaw FStB 315 on F+ 315 as a function of the spindle speed and static gripping force Fspo at max. gripping diameter, gripping stage A4, total centrifugal moment of all three stepped jaws is 0,733 kgm.

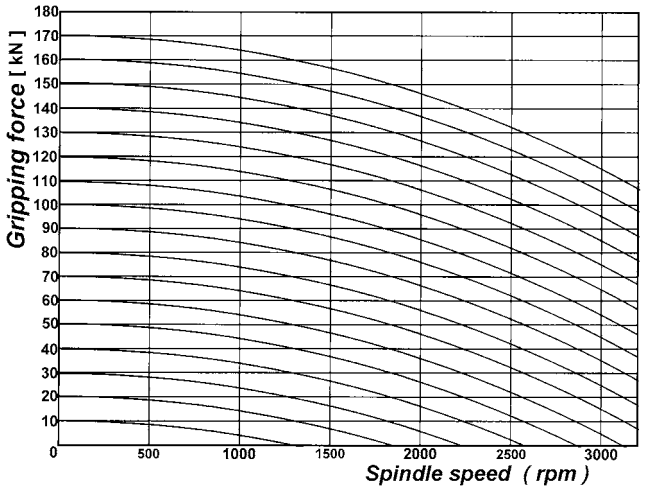

F 90

Hard stepped jaw FStB 400 on F+ 400 as a function of the spindle speed and static gripping force Fspo at max. gripping diameter, gripping stage A4, total centrifugal moment of all three stepped jaws is 1,994 kgm.

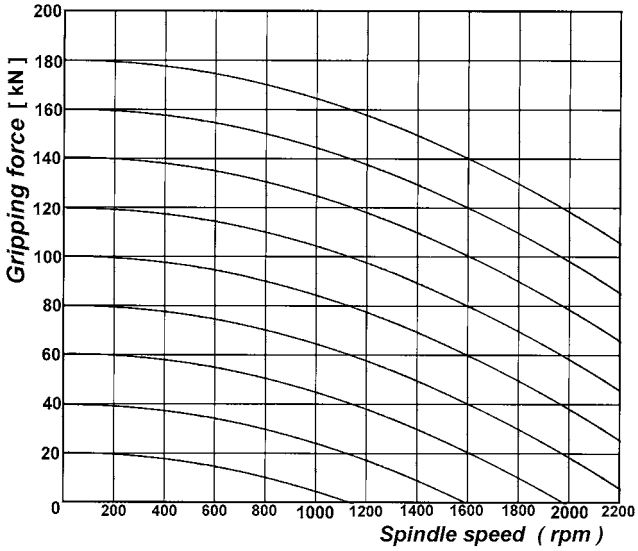

F 91

Hard stepped jaw FStB 500 on F+ 500 as a function of the spindle speed and static gripping force Fspo at max. gripping diameter, gripping stage A4, total centrifugal moment of all three stepped jaws is 4,299 kgm.

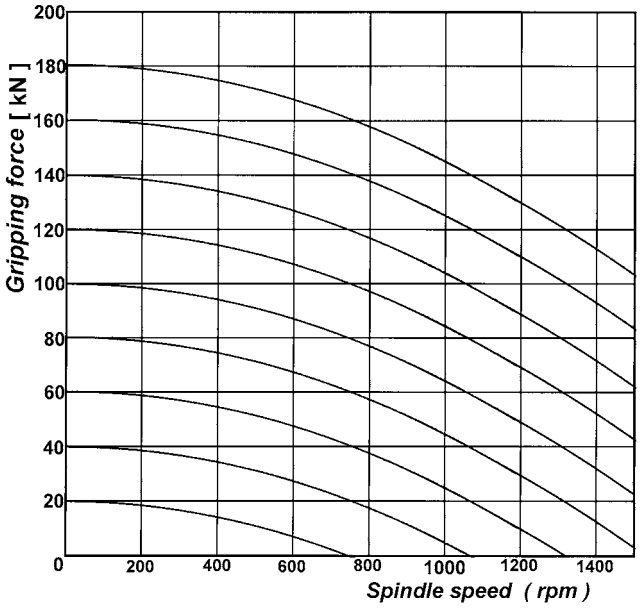

F 92

Hard stepped jaw FStB 315 on F+ 315 as a function of the spindle speed and static gripping force Fspo at max. gripping diameter, gripping stage A4, total centrifugal moment of all three stepped jaws is 0,733 kgm.

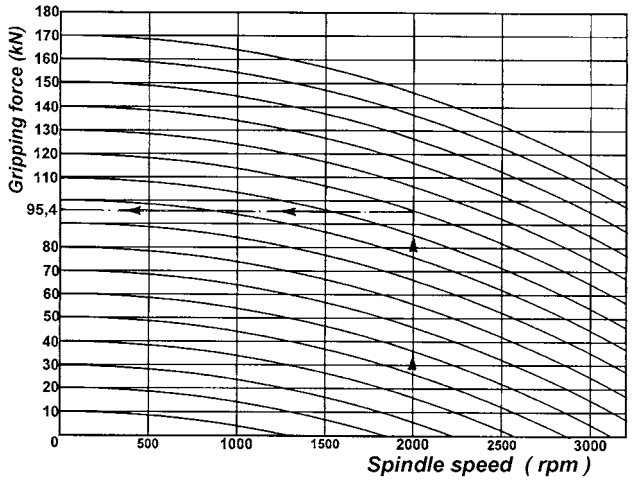

F 93

Example:
The gripping diameter Dsp = 321mm, the static gripping force Fspo = 120 kN, spindle speed n = 2000rpm. What is the dynamic gripping force and the gripping force loss at spindle speed n = 2000rpm?
The dynamic gripping force is 9540daN, the gripping force loss is 2460daN.

6.9 Gripping Force / Torque Curve:

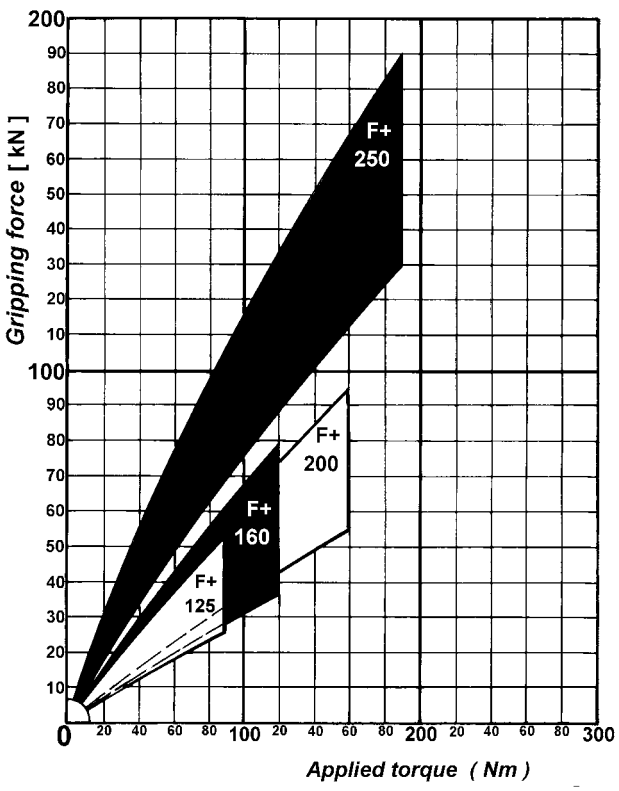

F 94

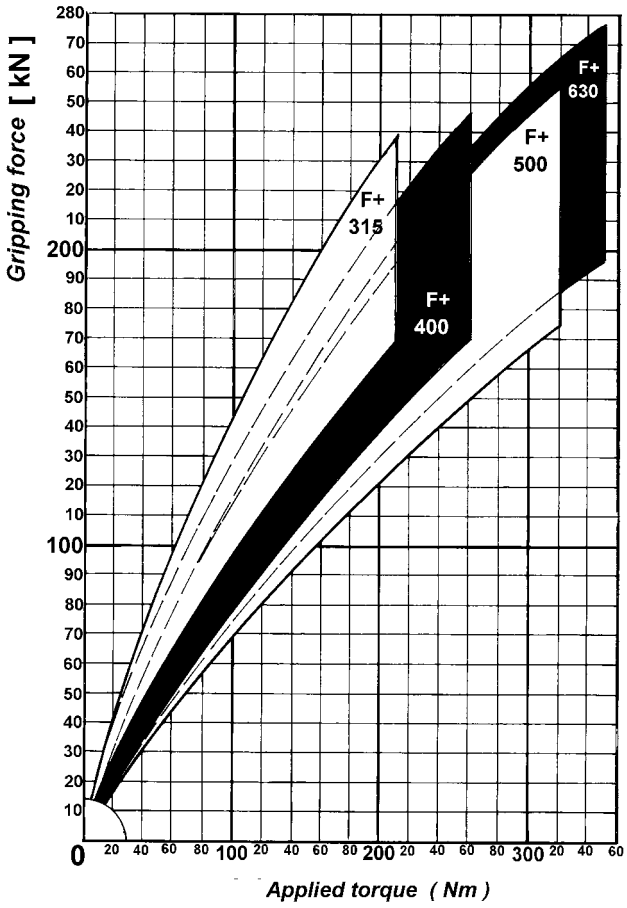

F 95

7.1 Measures before Mounting of the Chuck:

7.1.1 Checking the Spindle Nose for Mounting of the Adapter Flange:

The mounting surfaces on the spindle nose have to be checked with a dial gauge to ensure that high accuracy in respect of radial run-out of the manual chuck is achieved afte mounting.

* Radial run-out of register: **max. 0.005 mm.**
* Axial run-out of locating face: **max. 0.005 mm.**
* Check the flatness of the face using a straightedge.
* The surface of the face has to be clean and the holes in it must be deburred.

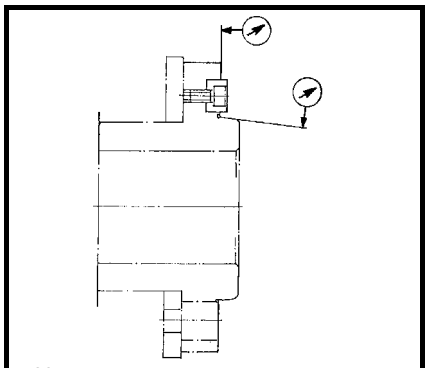

F 96

7.1.2 Checking of the Mounted Adapter Flange:

The F+ manual chuck has a central register. An appropriate adapter flange (see also Section 5.13.1) must be attached to the spindle nose of the lathe for direct mounting of the manual chuck on the machine spindle with short taper to DIN, ISO and ASA standards.

* If the adapter flange is manufactured by the user, it must be finish-turned on the machine spindle and balanced before the manual chuck is mounted.
* Remove any dirt or chips from the machine spindle. Clean the centering collar and locating face of the adapter flange.

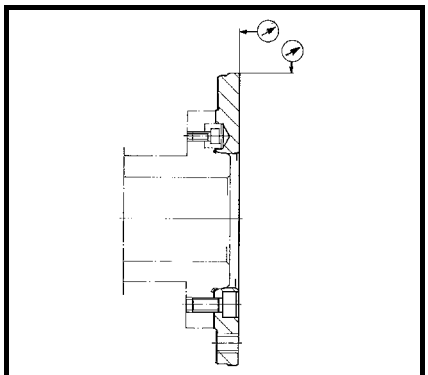

F 97

* After mounting of the adapter flange, the radial and axial run-out must be checked as described in Section 7.1.1.
* Check the flatness of the face with a straightedge.
* The through-bores for the studs must be countersunk so that the threads cannot be stripped.
* The mounting surfacer for the manual chuck must not be concave or convex.
* The flange must be in contact over the whole surface!

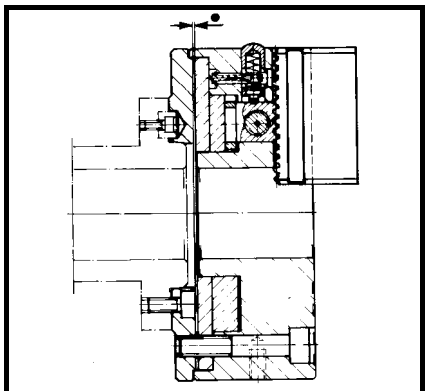

F 98 ● Incorrect!

CAUTION ! ***Do not allow the outer rim of the manual chuck to rest on the mounting flange!***

Threaded bores must be drilled in the adapter flange for attachment of balancing weights which, depending on the size of the manual chuck to be mounted, should be between M8 and M16 with a thread depth of max. 2d.

The outer diameter of the mounting flange must be relieved so that it is approx. 1mm less than the register diameter for the manual chuck.

See Figure F 99 ➡

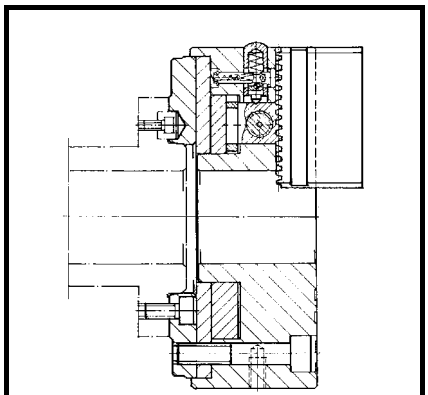

F 99 Correct!

7.2 Mounting the Manual Chuck:

Remove any chips from the machine spindle before mounting the manual chuck. Clean the register and locating faces of the adapter flange!

CAUTION !

If a mobile hoist which can be moved in all directions is available for mounting of the manual chuck, observe the following points: The working load of the hoist must be at least the weight of the manual chuck!
For weights of the manual chucks, see Section 1.4, page 4.

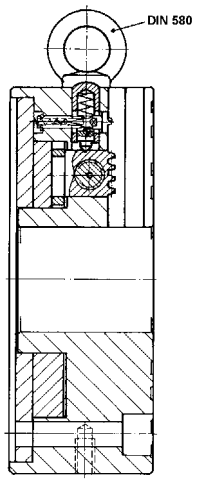

F 100

If using an eyebolt, screw the eyebolt into the threaded bores in the circumference of the chuck body. Attach the chuck to the hoist using a chuck hook and lift the chuck to the height of the spindle nose.

CAUTION !

Screw the eyebolt only into the threaded bores in the circumference of the manual chuck body!

♠ See Figure F 100.

CAUTION !

Due to their low weight, manual chucks Type F+ 125 to 250 have no threaded bores in the circumference of the chuck body. Attach these manual chucks to the hoist using a hoist rope (hemp or wire rope) and lift the chuck to the height of the spindle nose. The hoist rope must satisfy the technical conditions of supply in accordance with DIN 6890!

Mounting Procedure:

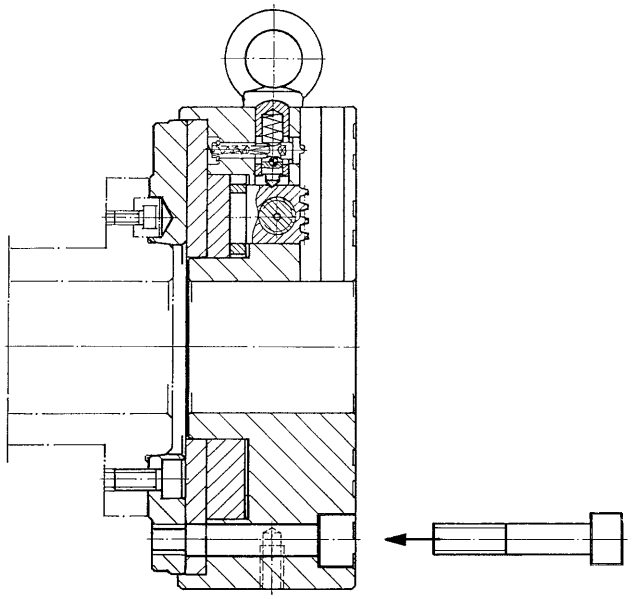
F 101

Push the register of the manual chuck onto the centering collar of the adapter flange, ensuring that the mounting bolts are correctly aligned with the threaded bores in the adapter flange!

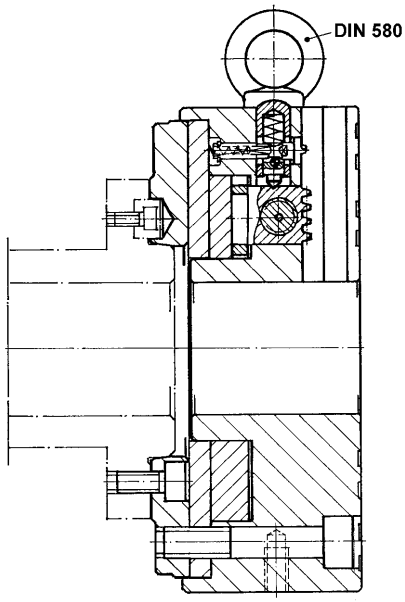

F 102

Secure the manual chuck to the adapter flange by tightening the mounting bolts using a torque wrench. Before finally tightening the socket head screws in clockwise direction, align the chuck so that after mounting, the run-out at the test faces of the manual chuck does not exceed 0,01mm.

Observe the tightening torques of the chuck mounting bolts, see table!

Bolts to DIN 912 267		Grade 10.9				Manufactured to DIN	
Thread		M 8	M 10	M 12	M 16	M 20	M 24
Tightening torque	Nm	36	72	125	310	610	820
Max. bolt load	N	24300	38700	56500	107000	166000	208000

After mounting the manual chuck on the adapter flange, any remaining imbalance must be corrected by screwing corresponding threaded studs to DIN 914 into the chuck side of the adapter flange. The threaded bores in the body of the manual chuck must not be used for insertion of threaded studs as otherwise the precise dynamic balancing of the manual chuck will be lost.

Check the proper mounting using a dial gauge on the test faces of the manual chuck.

Radial run-out : max. 0,01 mm (guide value**)**

Axial run-out : max. 0,01 mm (guide value**)**

See Figure F 103 ➨

If the manual chuck binds without top jaws, the chuck body may be distorted.

In this case, remove the manual chuck from the machine spindle. Check the flatness of the chuck mounting flange aand the diameter of the short taper register!

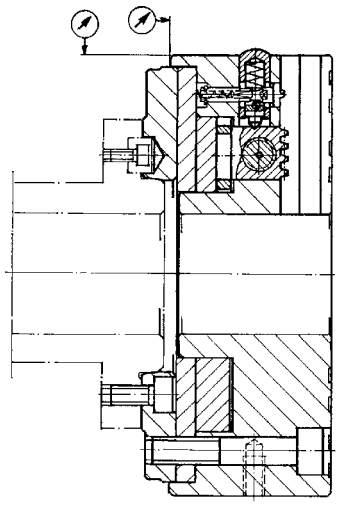

F 103

7.3 Balancing of Rotating Parts:

The high spindle speeds necessitate accurate balancing of the rotating parts. Any imbalance in the chuck body will cause free centrifugal forces when the spindle rotates; these centrifugal forces can then cause vibrations which have a negative effect on the product quality. Since the centrifugal forces per unit of weight increase with the square of the rotational speed, the demands on the balancing precision increase as the rotational speed increases. The lathe spindle, the manual chuck and the adapter or mounting flange must therefore be balanced. The manual chuck is dynamically balanced, whereby any imbalance can be corrected by screwing corresponding balancing weights into the chuck body to achive the balance quality Q = 2,5 to VDI 2060. The chuck mounting flanges supplied by us are also balanced.

7.4 Checking the Radial and Axial Run - Out of Manual Chucks:

In accordance with the Technical Conditions of Supply for Manually Actuated Lathe Chucks to DIN 6386 Sheet 3 or DIN 6350, the radial and axial run-out must be checked with internally or externally stepped chuck jaws (FStB bzw. FGB und FHB).
In order to check the radial and axial run-out tolerances, mount the manual chuck on the spindle nose of a lathe or test device according to the instructions of the manufacturer. Pay particular attention to the backlash-free mounting in the register and the flush mounting of the manual chuck.
The test mandrels and test rings must be hardened and ground, whereby the deviations in form must not exceed 3µm and the peak-to-valley roughness must not exceed Rt = 2µm.
Grip the test mandrels and test rings in the manual chuck in the normal manner so that they contact the full gripping surface of the chuck jaws. They may only be actuated (for gripping) with the chuck key supplied.

To test the radial run-out, position the dial gauge so that it contacts test mandrels at a distance ***p*** or contact test rings immediately alongside the chuck jaws.

Test mandrels
Test 1

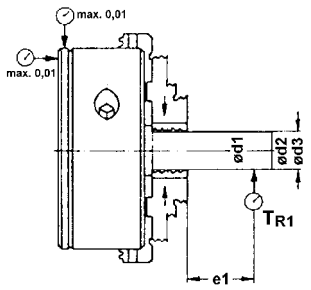

F 104

Test rings
Test 2

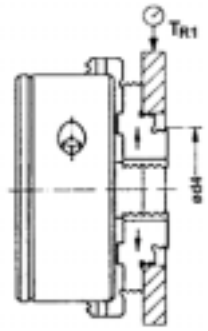

F 105

Test 3

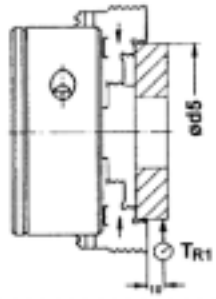

F 106

Axial run-out
Test 4

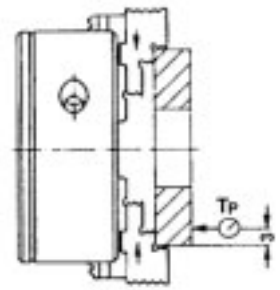

F 107

Chuck size F+	Test 1 Diameter d1	d2	d3	Distance e1	Test rings Test 2 d4	Test 3 d5	Radial run-out Permissible deviations to DIN 6350	FORKARDT	Axial run-out Permissible deviations to DIN 6350	FORKARDT
125	18	25	30	60	50	100	0,04	0,02	0,03	0,015
160	18	30	40	60	50	100	0,04	0,02	0,03	0,015
200	30	40	53	80	80	160	0,06	0,03	0,03	0,015
250	30	53	75	80	80	160	0,06	0,03	0,03	0,015
315	53	75	100	120	125	250	0,08	0,04	0,04	0,02
400	53	100	125	120	125	250	0,08	0,04	0,04	0,02
500	75	100	125	160	200	400	0,10	0,05	0,04	0,02
630	75	125	160	160	200	400	0,10	0,05	0,04	0,02

7.5 Mounting the Top Jaws:

The top jaws are secured to the base jaws using corresponding socket head screws. The radial positioning is effected via the cross - tenons of base and top jaws.

Observe the following points:

During mounting of the top jaws on the base jaws, observe the markings 1, 2 or 3 on the base jaws or the corresponding guides in the chuck body!

Mount top jaw 1 on base jaw 1 of the manual chuck!

Tighten the jaw mounting bolts to the specified torque. Tightening torques, see Section 5.12, page 21!

Use only ORIGINAL FORKARDT jaw mounting bolts of the prescribed quality and grade!

To install the chuck jaws, back off the splines of the wedge blocks out of the area of the jaw guides by turning the chuck key in counter-clockwise direction.

In this position, the indicator pin protrudes several millimetres out of the face of the chuck body.

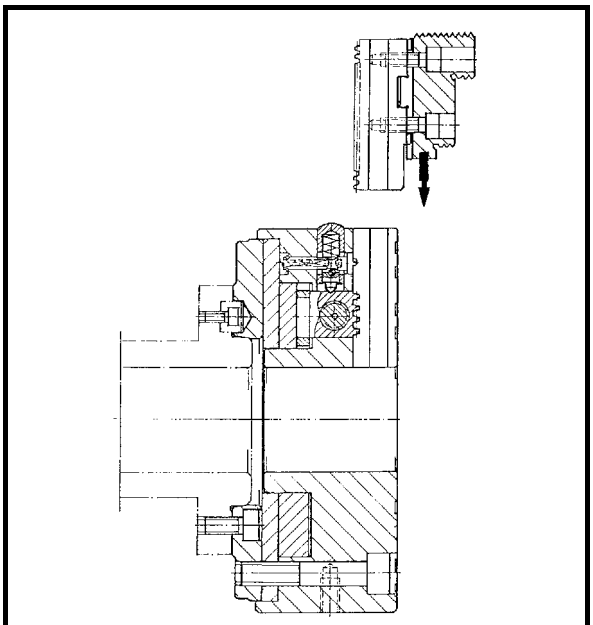

F 108

Depress the jaw locks to move the chuck jaws in the guides of the chuck body. The correct positioning of the chuck jaws is indicated by the audible engagement of the spring-loaded latch in the splines on the rear of the chuck jaws.
Now turn the chuck key several rotations in clockwise direction until the indicator pin is retracted flush with the chuck body. In this position, the splines of the wedge blocks and chuck jaws are engaged and the chuck is ready to grip a workpiece.

7.6 Preparations for Use of the Chuck:

After the manual chuck has been mounted but before it is used, the following should be carried out in order to ensure trouble-free operation:

* Clear everything from the machine which does not belong to it, such as tools used for mounting the chuck.
* Grease the manual chuck at the grease nipple (on chucks Futter F+ 125 to 200 in the threaded plug, on chucks F+ 250 to 630 in the spindle square drive) with 3 strokes of the grease gun.
* Operate the chuck without gripping a workpiece in order to distribute the grease.
* Check all visible screws and bolts for tightness.
* Check the movement of the jaws.

7.7 Safety Instructions:

Secure the drive of the lathe spindle to prevent starting when the indicator pin is protruding from the chuck body when the manual chuck is mounted!

CAUTION ! ***Workpieces must not be chucked when the indicator pin is protruding out of the chuck body. There is then a danger that the splines of the wedge blocks and chuck jaws are not or not sufficiently engaged or that there is not sufficient reserve jaw stroke for safe and reliable holding of the workpiece.***

* ***Never leave the manual chuck with the wedge blocks disengaged!***
* ***Never force binding chuck jaws into the jaw guide using a hammer!***
* ***Do not unscrew top jaws for precision chucking from the base jaws as otherwise the precision will be lost!***
* ***grind out subsequently supplied hard top jaws or stepped jaws under gripping pressure on the chuck on which they are to be subsequently used for machining!***

CAUTION ! ***Actuate the manual chuck with the chuck key only when the chuck is mounted on the spindle.***

CAUTION ! ***Remove the chuck key from the square drive of the threaded spindle immediately after completing the chucking procedure. For safety reasons, it must never be left in the chuck!***

CAUTION ! ***Check the radial and axial run-out only with the manual chuck mounted correctly. Do not mount the manual chuck on a mandrel between the centres for testing!***

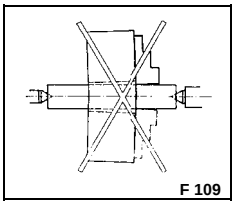
F 109

* ***Check that all guards and interlocks are in a fully functional condition!***

8.1 Instructions:

The initial period of use has a marked effect on the satisfactory performance of the manual chuck. Check the proper mounting of the manual chuck at this stage.

* Mount the top jaws (with cross-tenons) on the chuck and then connect to the base jaws with the jaw mounting bolts. Tighten the jaw mounting bolts to the torque specified in the table on page 21.

CAUTION ! ***When mounting the base jaws, observe the marks 1, 2, 3 on the chuck body (guides) and on the base jaws!***

CAUTION ! ***Fit base jaw 1 in the corresponding guide 1, etc. of the manuak chuck!***

Do not overload the manual chuck! The torque applied to generate the gripping force must be matched to the maximum permissible torque of the manual chuck used and must not be exceeded!

CAUTION ! ***During gripping with the chuck key, do not use an extension tube as otherwise an excessively high load can be placed on the internal parts of the chuck!***

* ***Binding of the manual chuck may be the result of strained base jaws or top jaws. Remove the top jaws and base jaws from the chuck body.***
* ***If the manual chuck binds without top jaws, the chuck body may be distorted. In this case, remove the manual chuck from the machine spindle. Check the flatness of the chuck mounting flange and the diameter of the short taper register!***
* ***Check the jaw travel! Jaw travel, see Section 5.4, page 13.***
* ***Measure the static gripping force Fspmax of the chuck using a static gripping force meter, e.g. SKM 1200 / 1500 and compare with the value specified in the table, Section 1.4, page 4.***

8.2 Operation:

Insert and grip the workpiece in the manual chuck. Start the machine and wait for the machine program to enable the spindle rotation.

Do not start the machine spindle until the workpiece has been gripped within the permissible working range of the manual chuck and the indicator pin is flush with the chuck body!

Machine workpieces at high spindle speeds only under the protection of an adequately dimensioned safety guard!

Make sure to fit safety guards and other protective devices!

* ***The safety guard must be locked as long as the machine spindle is running and should only be opened when the spindle has come to an absolute stanstill!***
* ***Operation of the manual chuck must always conform to the local safety and accident prevention regulations!***
* ***Pay attention to abnormal running noises!***
* ***Inspect material specimens!***

* ***The precision of the manual chuck is illustrated during repeated chucking of a workpiece and by its running precision when the workpiece was machined in several consecutive chuckings. If the center of the gripping cross-section deviates from the lathe centerline beyond the specified tolerance, this will result in faulty workpieces and consequently to scrap!***

8.3 Unauthorised Use:

CAUTION ! ***Any system imbalance observed in the manual chuck must be eliminated immediately!***

8.4 Safety Instructions:

* ***During rotation of the manual chuck, use a dynamic gripping force meter, e.g. FORSAVE D, to measure the dynamic gripping force. See also Section 6.3.***
* ***Determine the loss of gripping force under dynamic conditions at every changeover to ensure that the gripping force is adequate for the intended machining operation. See also Section 6.2.***
* ***If a drop in gripping force is observed, the cutting operation must be stopped immediately and the lathe spindle switched off!.***
* ***In order to maintain the gripping force over long production runs, operate the chuck periodically under no-load (without a workpiece). A uniform gripping force of the chuck is assured only if the lubrication films are maintained and the grease is distributed to the loaded parts.***
* ***Release the workpiece from the chuck only after stopping the machine spindle!***
* ***Do not leave the workpiece in the chuck overnight. Remove the workpiece from the chuck!***

8.5 Procedure in the Event of Malfunctions:

Irrespective of the instructions given below, the manual chuck must always be operated in accordance with the local safety and accident prevention regulations!

We recommend that a lockable switch be fitted which prevents an inadvertent starting of the machine spindle during repairs or in the event of a malfunction.
The table below describes the symptoms, causes and remedial actions to be taken in the event of any malfunctions in the manual chuck. For various reasons (level of knowledge of the operating personnel, etc.), no guarantee can be given for the completeness of the table.

Symptom	Cause	Remedial action
Severe vibration of the machine	Imbalance of the mounting flange and possibly the chuck due to incorrect mounting	Check run-out on the reference surfaces of the manual chuck Correct system imbalance on the manual chuck immediately Possibly rebalance mounting flange Readjust spindle bearings
Insufficient gripping force	Soiling Inadequate lubrication	Clean the manual chuck Check lubrication; if insufficient, dismantle, clean and lubricate the manual chuck.
Jaw stroke is not achieved	Soiling in the wedge block grooves	Clean the manual chuck

Symptom	Cause	Remedial action
No gripping force	Straining of the chuck jaws due to different heights of the cross-tenons	Check the mounting surfaces Possibly use of parts from a different manufacturer
Top jaw cannot be moved	Splines of base jaw (FGB) or top jaw (FStB, FMB) soiled	Clean Possible difference in pitch of self-manufactured top jaws (FStB, FMB)
Excessive radial run-out of work-piece with ground out soft top jaws	Confusion of the top jaws and possibly also of the base jaws	Check and correct, if necessary

8.6 Restarting after a Malfunction:

See Section 8.1 and 8.2 .

8.7 Before Prolonged Disuse:

* ***Remove the workpiece from the chuck!***
* ***Clean and grease the chuck!***

Do not clean the manual chuck with compressed air, because chips and coolant may get into the eyes!
Accident hazard!

* ***Coat bright metal parts with a corrosion inhibitor. Observe the safety instructions of the corrosion inhibitor manufacturer!***

8.8 After Prolonged Disuse:

* ***Clean corrosion inhibitor from the chuck parts.***
* ***Lubricate the manual chuck. Remove any excess grease which emerges!***
* ***Carry out a no-load operating cycle of the chuck (without workpiece) to distribute the lubricating grease!***
* ***At standstill of the machine spindle, check the static gripping force Fspmax with a static gripping force meter, e.g. SKM 1200 / 1500!***
* ***Load the workpiece.***

Otherwise proceed as described in Section 7.6 and Section 8.2!

9.1 Instructions:

Observe the ***"Safety Instructions"*** in Section 2 when carrying out checks, maintenance and / or service work on the manual chuck.

* ***Malfunctions resulting from inadequate or improper maintenance, reconditioning or servicing can be very costly and give rise to long downtimes.***
* ***Careful lubrication is essential for trouble-free operation of the manual chuck.***
* ***The operational reliability and a long service life of the power chuck depend i.a. on proper servicing and maintenance.***
* As operating conditions vary, it is not possible to specify in advance how often servicing, inspection for wear or reconditioning are necessary. This must be determined on the basis of the loading conditions and degree of contamination encountered.

Hours of Operation / Frequency	Type of Check / Servicing Instructions
After 24 hours of operation; when new or after reconditioning	Lubrication of the manual chuck Check tightness of screws and bolts
Weekly	Lubrication of the base jaws and threaded spindle
Weekly	Check the static gripping force Fspmax using a gripping force meter, e.g. SKM 1200 / 1500
Monthly	Check the base jaws, wedge blocks and splines for wear

9.2 Maintenance, Servicing:

Always stop the machine spindle and secure the lathe against inadvertent starting (with a lockable local switch) before starting maintenance, inspection or other work!

Put up a WARNING signs!

CAUTION !

Check the service condition using a static gripping force meter, e.g. SKM 1200 / 1500!

* If the static gripping force Fspmax of the manual chuck specified in Section 1.4, page 4 is no longer achieved even with good lubrication, the chuck must be removed from the machine spindle and then dismantled, cleaned and greased again!

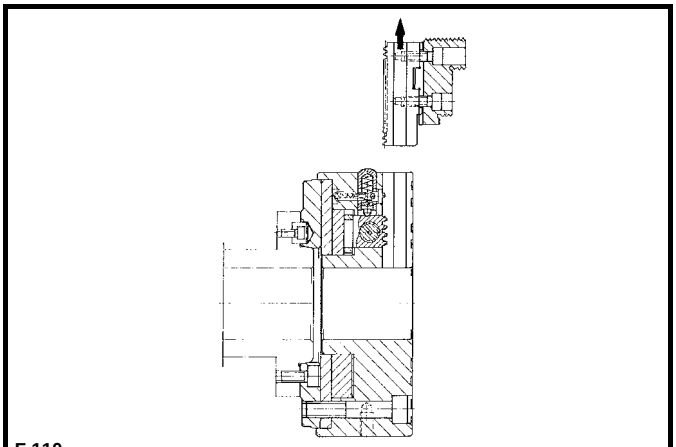

F 110

Disengage the splines of the wedge blocks and chuck jaws by turning the chuck key. Depress the spring-loaded latch and remove the chuck jaws from the chuck body.

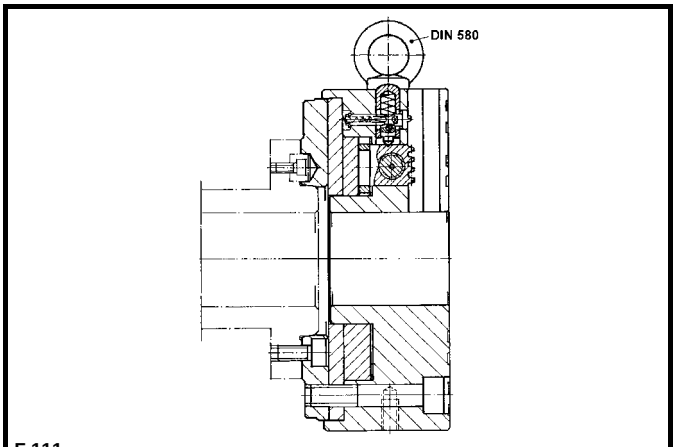

F 111

Screw an eyebolt into the threaded bore in the circumference of the manual chuck. Attach the chuck to the hoist using a chuck hook.

9.3 Dismounting of the Manual Chuck:

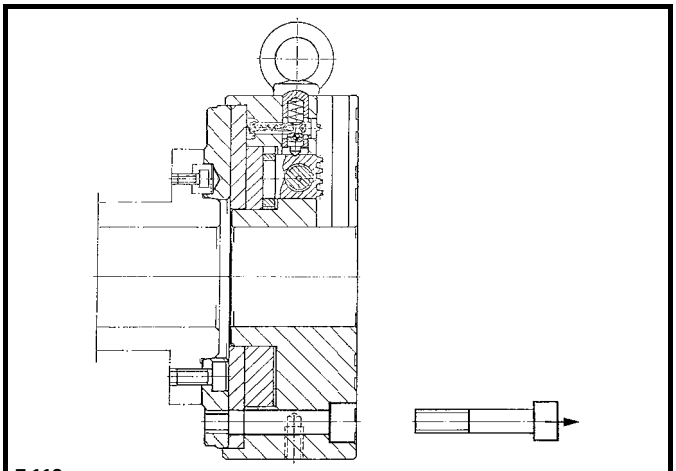

F 112

Loosen chuck mounting bolts (36) and pull the manual chuck from the centering collar of the adapter flange. Place the manual chuck on a pallet or workbench.

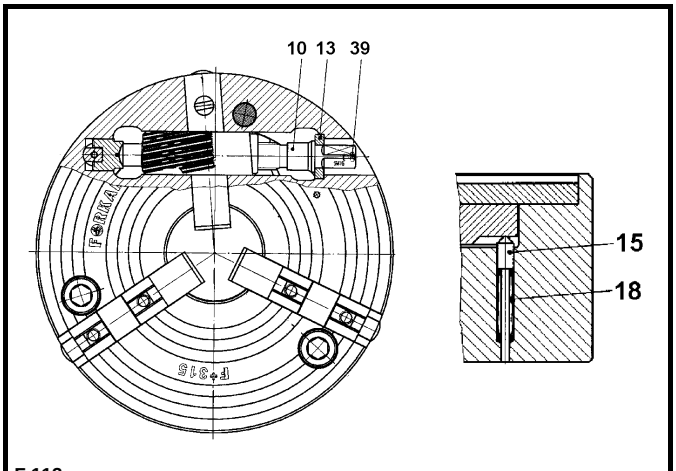

F 113

Actuate threaded spindle (10) with the chuck key until indicator pin (15) is flush with the chuck body. Wedge block (5) moves towards the thrust ring (13).

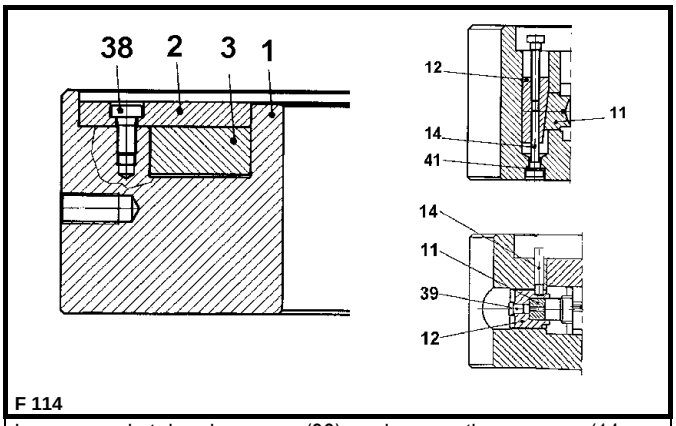

F 114

Loosen socket head screws (38) and supporting screws (14, on manual chucks above size F+ 250) and remove cover (2) from the chuck body.

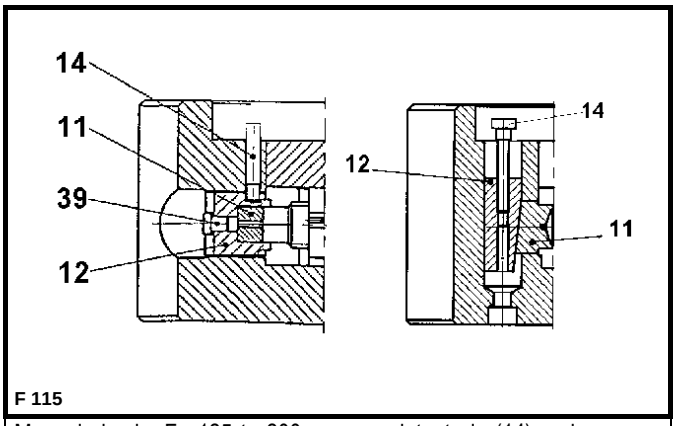

F 115

Manual chucks F+ 125 to 200: remove detent pin (14) and unscrew threaded plug (12) with thrust plate (11) from the chuck body. Manual chucks F+ 250 to 630: Screw supporting screw (14) into supporting wedge (12) and remove from the chuck body. Thrust stud (11) moves to the left of the bore of the supporting wedge.

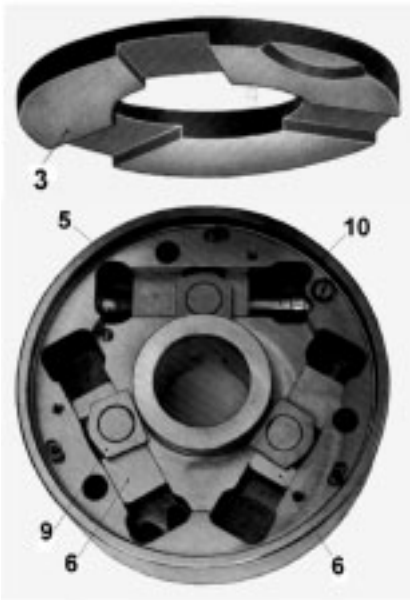

F 116

♠ **Figure F 116**

Remove thrust ring (3) from the chuck body. Pull the slide blocks (9) which are vow revealed from the journals of wedge blocks (5, 6) and carefully remove the two wedge blocks (6) without thread from the wedge block guides.
Move wedge block (5) to the right with threaded spindle (10) and remove at an angle from the wedge block guide complete with the thrust ring.

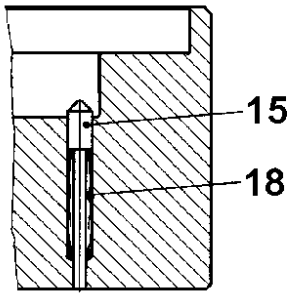

F 117

Remove indicator pin (15) complete with pressure spring (18) from the chuck body.

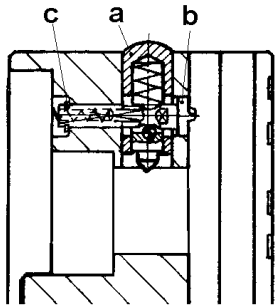

F 118

Remove circlip (c), press thrust stud (a) and remove spring latch (b) complete with pressure spring from the chuck body to the front.

* ***Wash and clean all parts and check for damage. Replace any damaged parts. Grease base jaws, wedge blocks, chuck body (at the guides for the base jaws) with lubricating grease, e.g. PF 5 or PF 6!***
* ***Install the individual parts in the chuck body again in reverse order. Observe the following points:***
* ***When istalling the indicator pin (15) with pressure spring (18), insert the pin into the chuck body so that it protrudes from the face and can be secured with a strip of adhesive tape.***

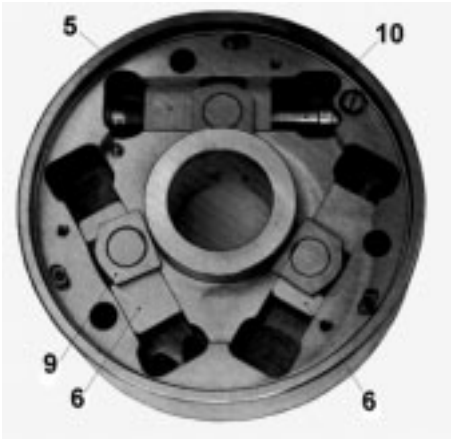

F 119

Place the two wedge blocks (6) without thread into the middle of the wedge block guides and place slide blocks (9) on the journals of wedge blocks (5, 6). ***Insert wedge blocks (5) with threaded spindle (10) and thrust ring (13) into the wedge block guide and bore to take the thrust ring at an angle. Place slide block (9) onto the journal of the slide block and position in the middle.***
Manual chucks F+ 125 to 200: Screw threaded plug (12) with thrust plate (11) into the chuck body until the bore for the detent pin (14) is visible in the threaded plug. Install detent pin (14).
Manual chucks F+ 250 to 630: Screw supporting screw (14) into supporting wedge (12) and insert into the chuck body. Thrust stud (11) moves to the right towards the threaded spindle.

Screw supporting screw (14) with toothed lock washer (41) into supporting wedge (12) from the face side of the chuck. Insert thrust ring (3), ensuring that the slide blocks engage in the grooves and the tip of the indicator pin engages in the recess of the thrust ring. Remove the adhesive tape from the indicator pin.

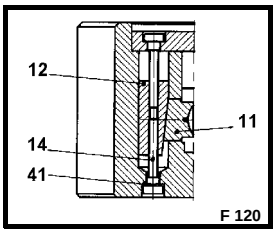

F 120

During installation of cover (2), pay attention to the exact position of the bore in relation to detent pin (14) or supporting screw (14).
Screw lower detent pin (14) with toothed lock washer (41) into supporting wedge (12) and tighten in such a way that the threaded spindle can be adjusted backlash-free. Screw the upper retaining screw into the supporting wedge and tighten.

Tighten all mounting bolts to the prescribed torque.

CAUTION ! ***Observe the numbering when installing the chuck jaws! Chuck jaw 1 in guide 1 of the chuck body, etc.***

* Mount the manual chuck on the machine spindle as described in Sections 7.1 and 7.2!
* Tighten the mounting bolts to the torque given in Section 1.7, page 5 using a torque wrench.
* Put the chuck into operation as described in Section 7.6 and Section 8.2!

9.4 Safety Instructions:

* ***The high spindle speeds customary on modern lathes subject the manual chuck to high loads. When tools collide with the manual chuck, e.g. due to faults in the machine program, the chuck can be damaged.***
* ***After a collision, stop the machine spindle immediately and inspect the manual chuck for damage.***
* ***Remove the chuck from the spindle and do not continue to work with the chuck!***
* ***In addition to visible damage (e.g. to the top jaws and mounting bolts), damage may occur which is not immediately apparent, such as hairline cracks in the chuck body and in the base jaws.***
* ***In such cases, the affected parts of the chuck must be checked for cracks using a suitable non-destructive testing method in order to rule out any danger. Replace all damaged parts!***

  Suitable test methods are:
  – Dye penetrant test
  – Magnaflux test
* ***Replace any damaged top jaw mounting bolts only with bolts of the same quality and dimensions! Quality and dimensions, see the table below***

Bolts to DIN 912		Grade 10.9			Manufactured to DIN 267	
Thread		M6	M8 x 1	M12 x 1,5	M16 x 1,5	M20
Tightening torque	Nm	8,3	22	72	180	340
Max. bolt load	N	9750	19600	44000	85500	126000

The jaw mounting bolts must be tightened with the torque value indicated in the tabulation!

9.5 Lubrication:

Foreign matter penetrates into practically every manual chuck during machining. Scale and foundry dust increase the friction between the moving parts and coolant washes away the lubricants. Dirt and fine chips can easily penetrate the chuck when the chuck jaws are wide open and the inner parts of the jaw guides is exposed.

In order to avoid this, profile plugs are inserted into the clean jaw guides with the heat-resistant cover plate facing towards the bore before machining of the workpiece. These plugs only delay the penetration of foreign matter and the chuck must nevertheless be cleaned and lubricated at regular intervals to achieve consistent gripping forces, accuracy and long life.

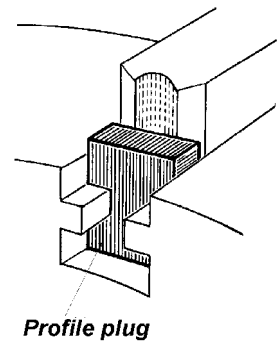

F 121

CAUTION ! ***Careful lubrication is essential for trouble-free operation of the manual chuck.***

Lubrication and all work necessary for the lubrication may only be carried out with the machine spindle at standstill!

CAUTION ! ***Soiled or poorly lubricated manual chucks suffer an appreciable loss of gripping force!***

The manual chuck must be relubricated when the static gripping force Fspo of the chuck specified in the table in Section 1.4!

CAUTION ! ***Check the static gripping force at regular intervals using a static gripping force meter, e.g. SKM 1200 / 1500!***

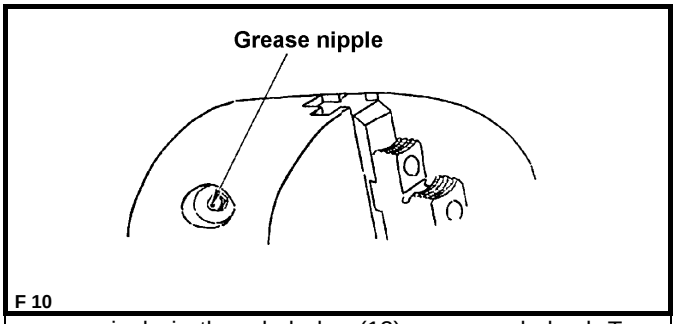

grease nipple in threaded plug (12) on manual chuck Type F+ 125 to Type F+ 200.

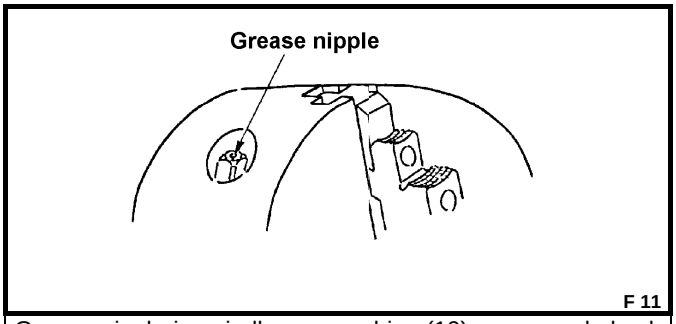

Grease nipple in spindle square drive (10) on manual chuck Type F+ 250 to Type F+ 630.

* Lubricate the manual chuck. 3 strokes of the grease gun are sufficient! For details of the grease gun, see publication 990.01.5D.
* We recommend the following lubricants:
  PF 5 for all other parts of the manual chuck
  PF 6 for the wedge blocks, base jaws and the jaw guide.
* Store lubricants only in clean, closed containers under dry and cool conditions!

9.6 Reconditioning:

9.6.1 Instructions:

For the first repair we recommend that you call upon the manufacturer's personnel. Your maintenance personnel then has an opportunity to receive intensive training.
Spare parts should be ordered in accordance with the spare parts lists in Section 10.2 on page 56.

The lathe must be stopped and prevented from inadvertent starting before any maintenance or reconditioning work is carried out on the manual chuck.

Remove the chuck jaws from the jaw guides.
See also description in Section 5.5.1!
Put up a WARNING sign!

* Only maintenance work coming within the scope of servicing or entailing the replacement of parts subject to wear is described here.

* If, for particular reasons, you carry out the replacement of parts yourself, you should keep in stock spare and wear parts supplied by the manufacturer.
* If screws or bolts are rendered unserviceable during dismantling, they have to be replaced by screws and bolts of the same grade and design! See tables below.

a) Tightening torques for the chuck mounting bolts:

Bolts to DIN 912		**Grade 10.9**			**Manufactured to DIN 267**		
Thread		M 8	M 10	M 12	M 16	M 20	M 24
Tightening torque	Nm	36	72	125	310	610	820
Max. bolt load	N	24300	38700	56500	107000	166000	208000

Bolts to DIN 7984		**Grade 10.9**		**Manufactured to DIN 267**		
Thread		M 4	M 5	M 8	M 10	M 12
Tightening torque	Nm	2,8	5,5	23	46	79
Max. bolt load	N	4000	6600	17000	27100	39600

The chuck mounting bolts must be tightened with the torque values indicated in the tabulation!

b) Tightening torques for the jaw mounting bolts:

Bolts to DIN 912		**Grade 10.9**			**Manufactured to DIN 267**	
Thread		M6	M8 x 1	M12 x 1,5	M16 x 1,5	M20
Tightening torque	Nm	8,3	22	72	180	340
Max. bolt load	N	9750	19600	44000	85500	126000

The jaw mounting bolts must be tightened with the torque values indicated in the tabulation!

9.6.2 Replacement of Parts:

As described in Sections 9.2 and 9.3!

Assembly as described in Section 7.2!

The manual chuck has to be put into operation as described in Section 7.6 and Section 8.2!

Observe the safety instructions!

10.1 Spare Parts:

A stock of the most important spare and wear parts on site is an important prerequisite for keeping the manual chuck in running order.
Please use the spare parts list when ordering spare parts.

For safety reasons, use only ORIGINAL - FORKARDT spare parts!

The use of parts from other sources on our products relieves us from our obligations regarding product liability, in so far as any damage can be attributed directly or indirectly to the use of such parts.

Our warranty extends only to ORIGINAL spare parts supplied by us!

Please note that special production and delivery specifications frequently exist for the parts manufactured or bought by us and that we always supply spare parts that meet the latest technical standards.

10.2 Spare Parts List Manual Chuck Type F+:

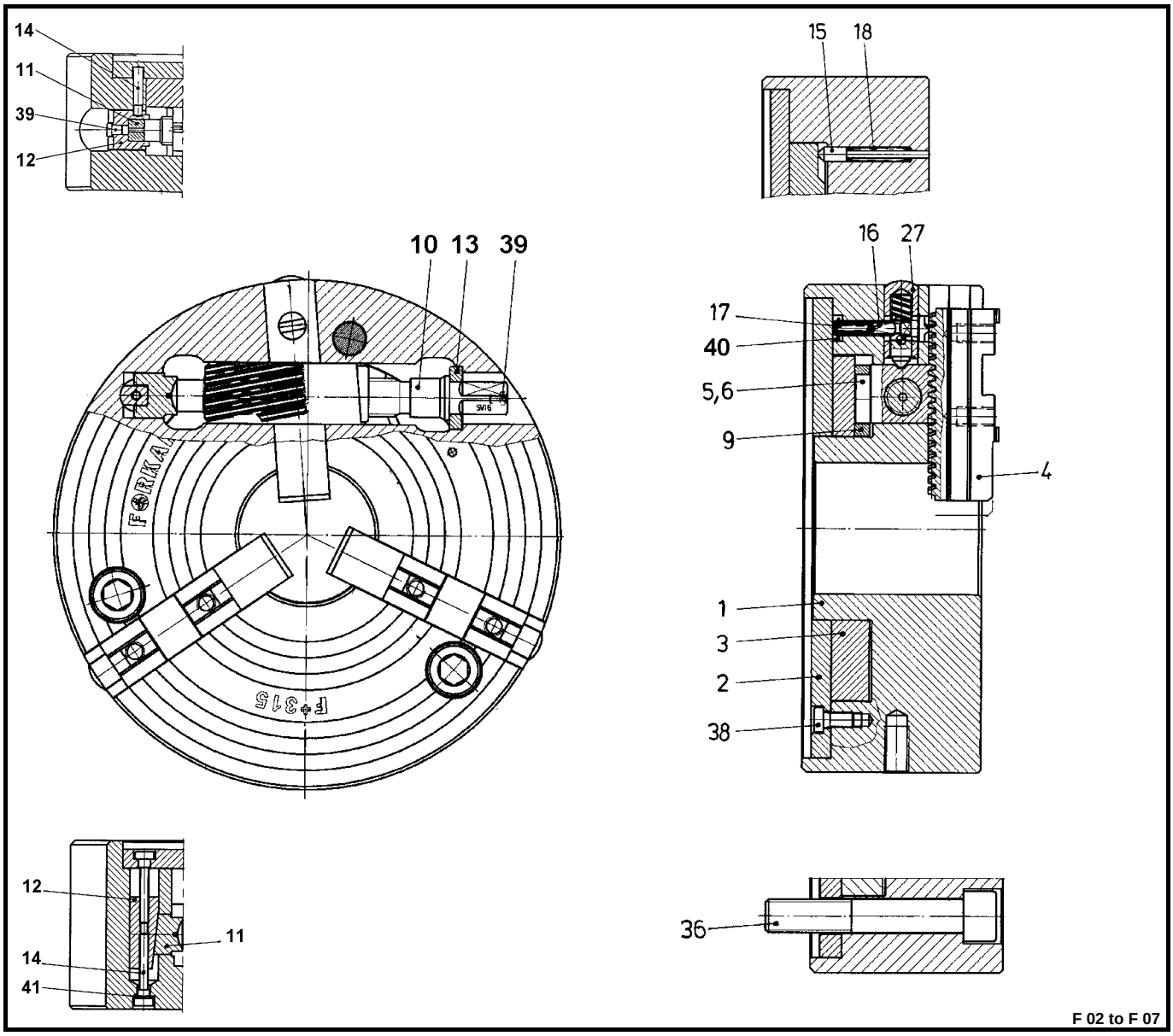

Manual chuck type ➡			F+							
Quantity	Designation	Part No.	125	160	200	250	315	400	500	630
1	Chuck body	1	164662001	164663001	164664001	164665001	164666001	164667001	164668001	164669001
1	Cover	2	164662002	164663002	164664002	164665002	164666002	164667002	164668002	164669002
1	Thrust ring	3	164662003	164663003	164664003	164665003	164666003	164667003	164668003	164669003
3	Base jaw	4	164662004	164663004	164664004	164665004	164666004	164667004	164667004	164669004
1	Wedge block with thread	5	164662005	164663005	164664005	164665005	164666005	164667005	164667005	164669005
2	Wedge block without thread	6	164662006	164663006	164664006	164665006	164666006	164667006	164667006	164669006
		7								
		8								
3	Slide block	9	164662009	164663009	164664009	164665009	164666009	164667009	164667009	164669009
1	Spindle	10	164662010	164663010	164664010	164665010	164666010	164667010	164667010	164669010
1	Thrust plate / thrust stud	11	164662011	164663011	164664011	164665011	164666011	164667011	164667011	164669011
1	Threaded plug / supporting wedge	12	164662012	164663012	164664012	164665012	164666012	164666012	164666012	164669012
1	Thrust ring	13	164662013	164663013	164664013	164665013	164666013	164667013	164667013	164669013
1 / 2	Retaining stud / supporting screw	14	164662014	164663014	164664014	164665014	164666014	164667014	164667014	164669014
1	Indicator pin	15	164662015	164663015	164664015	164665015	164666015	164667015	164667015	164669015
3	Detent pin / jaw holder	16	164662016	164663016	164664016	164665016	164666016	164667016	164667016	164669016
3	Pressure spring	17	164662017	164663017	164663017	164665017	164665017	164667017	164667017	164667017
1	Pressure spring	18	164662018	164663018	164664001	164665018	164666018	164667018	164667018	164669018
3	Cartridge assembly	27	-	180405000	180406000	180407000	180408000	180409000	180410000	180420000
3	Socket head screw DIN 912 10.9	36	M8 x 45	M10 x 60	M12 x 80	M16 x 100	M20 x 120	M24 x 120	M24 x 120	M24 x 140
3	Socket head screw DIN 912 10.9	37	-	-	-	-	-	-	M20 x 90	M24 x 110
3	Socket head screw DIN 7984 10.9	38	M4 x 8	M5 x 8	M8 x 16	M8 x 16	M10 x 20	M10 x 20	M10 x 20	M12 x 25
1	Funnel-type grease nipple	39	D6	D6	D6	D6	D6	D6	D6	D6
3	Circlip	40	-	7 x 0,8	7 x 0,8	10 x 1	10 x 1	16 x 1	16 x 1	16 x 1
1	Toothed washer	41	-	-	-	J8,2	J8,2	J8,2	J8,2	J8,2
6	Socket head screw DIN 912 10.9 1)	42	M6x12	M8x1x22	M8x1x22	M12x1,5x30	M12x1,5x35	M16x1,5x40	M16x1,5x40	M20x45
1	Chuck key	43	180412000	180413000	180414000	180415000	180416000	180417000	180418000	180419000

1) Jaw mounting bolts

The following data should always be specified when ordering spare parts:

- / **Quantity**
- / **Description**
- / **Spare parts list number**
- / **Identification number**
- / **Product**
- / **Serial number**

It is absolutely essential to specify the data marked with an / when ordering spare parts!

10.3 Address for Spare Parts and Service:

FORKARDT DEUTSCHLAND GMBH

Heinrich - Hertz - Straße 7

40699 ERKRATH

Telephone: 0211 - 2506 - 334 Mr. Kirchner

0211 - 2506 - 253 Mr. Lautz

Telefax : 0211 - 2506 - 236

Please use the above telephone or telefax numbers if you require the services of a fitter.

11.1 Tools and Accessories:

The following tools and accessories are supplied with the chuck to facilitate maintenance work:

DIN 911 hexagon key for socket head screws								
Chuck type F+ ➨	125	160	200	250	315	400	500	630
Key - A / F	3, 5, 6	4, 6, 8	6, 10	8, 10, 14	8, 10,17	8, 14, 19	8, 14, 19	10, 17, 19

Lubricating grease PF 5 and PF 6, grease gun, see tabulation below!
Degreasing agent, corrosion inhibitor etc. have to be supplied by you, but can also be ordered from us.

Designation	Type	Ident. No.	Content of can
Special grease	PF 5	101400 / 084	1,0 kg
Special grease	PF 6	101400 / 088	1,0 kg
Lever action grease gun	HH 1	101400 / 121	

Ring bolt to DIN 580				
Chuck type F+ ➨	315	400	500	630
Thread	M16	M16	M16	M20

11.2 List of Associated Publications:

Accessories for manual and power chucks		**990.01.05E**
Gripping force meter	**SKM 1200 / 1500**	**930.10.02E**
Gripping force meter	**FORSAVE D**	**620.01.06E**
Jaws for manual and power chucks		**700.10.01D**

MANUFACTURERS DECLARATION

We herewith declare that all items listed hereon are intendet to be incorporated onto a machine.
It is essential to ensure that the machine designated to accomodate these products is conform to the European Machine Directive.

Description:	**Manual three - jaw Chuck**
Type:	**F+**
Harmonized within standard specifictions:	**DIN EN 292 - 1, DIN EN 292 - 2, DIN EN 414, DIN EN 418, DIN EN 457, DIN EN 60 204 - 1**
Specific national standard & specification:	**Requirement of the Industrial Safety Authority BG Eisen und Metall II, No. GS - EM Nr.I / 2 - 50.**

Date / Authorization: **04.03.2004**

ppa. Antoni

……

(Manager of Design: Mr. Antoni)

This declaration becomes invalid in case parts of the product are changed or dismantled without our special acceptance.

Manufacturers Declaration No.: F+

As we are constantly engaged in improving our products, the dimensions and data given in this catalogue cannot always correspond to latest design features and are subject to alteration without notice.

ITW Workholding-Group

FORKARDT
AN ITW WORKHOLDING COMPANY

FIRST IN WORK-HOLDING
WOODWORTH
WORLD-WIDE

Buck Chuck
An ITW Workholding Company

L O C A T I O N S W O R L D W I D E

FORKARDT DEUTSCHLAND GMBH
Heinrich-Hertz-Str. 7
D-40699 Erkrath
Tel: (+49) 211-25 06-0
Fax: (+49) 211-25 06-221
E-Mail: info@forkardt.com

FORKARDT SCHWEIZ AG
Industriestrasse 3
CH-8307 Effretikon
Tel: (+41) 52-3 55 31 31
Fax: (+41) 52-3 43 52 40
E-Mail: info-ch@forkardt.com

FORKARDT FRANCE S.A.R.L.
28 Avenue de Bobigny
F-93135 Noisy le Sec Cédex
Tel: (+33) 1-41 83 12 40
Fax: (+33) 1-48 40 47 59
E-Mail: forkardt.france@forkardt.com

BUCK CHUCK
2155 Traversefield Drive
Traverse City, MI 49686
USA
Tel: (+1) 231-995-8312
Fax: (+1) 231-941-2466
E-Mail: buck.forkardt@forkardt.com

ITW INDIA LTD.
3rd Floor, Merchant Towers, 5
Road No 4, Banjara Hills,
Hyderabad - 500 034, India
Tel: (+91) 40 2335 3781
Fax: (+91) 40 2335 3791
E-mail: info@itwindia.com

N.A. WOODWORTH
2002 Stephenson Hwy.
Troy, MI 48083
USA
Toll Free: 800.544.3823
E-Mail: sales@itwworkholding.com
Website: www.itwworkholding.com

www.forkardt.com

www.itwworkholding.com

© 2006 FORKARDT, Errors and omissions excepted. ITW Workholding-Group is a division of Illinois Tool Works Inc.

Printed in Germany
110.50.03 E 8/06-0.0 FK Edition 8/97